The Oldest, Largest and Best Advertising Medium in Oneida County.

THE NEW NORTH.

The Most Widely Circulated Paper Published In Northern Wis.

VOLUME 24, NO. 26 — RHINELANDER, WISCONSIN, THURSDAY MORNING, SEPTEMBER 14, 1905. — TERMS—$1.50 IN ADVANCE

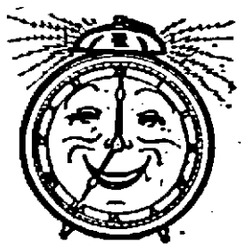

It Is Time

You selected a pair of those nobby, long wearing shoes for yourself or your children that we have just opened. They are beauties and they will fit perfectly. Send in your order now for a pair or come yourself.

SPAFFORD & COLE.

TAKE OFF YOUR HAT!

But she will know in a minute if you are bowing to her with a last season's hat, You don't see your own hat getting rusty, but you always notice it on the other fellow. Our new Hats are the best Hats for the money you aver saw. Every new shape is here in stiff or soft styles.

Put our $2.00 or $3.00 Hat along side of the Hatters' $5.00 Hat and you can't tell which is which. We don't sell the label or the Hatters' name. WE SELL THE HAT!

Hats at $2.00, $2.50 and $3.00

A saving to you on every Hat and satisfaction to you or your money back.

OUR MOTTO—QUICK SALES AND SMALL PROFITS

Zander & Fredrickson

Are You Thinking About Paint

If you are then get the best and most reliable Paint in the market, and that is the justly celebrated Heath & Milligan Paint. None better or more widely used. Looks better, goes farther and lasts longer on either inside or outside work than any other paint made.

Try Creolite on Your Floor — Made In All Shades and Colors

Furnaces and Wood Chutes

Now is a good time of the year to equip your home with a new furnace, and if you have a furnace you ought to have one of our Grand Rapids Wood and Coal Chutes installed. Saves work—saves time—saves money, the three essential points of your life time.

CALL AND LOOK THEM OVER.

LEWIS HARDWARE COMPANY

LAW,

REAL ESTATE LOANS,

INSURANCE.

The above lines are covered at the agency of

PAUL BROWNE

Christ. Roepcke,

MANUFACTURER OF

Heavy and Light Harness,

Prices from $32 to $35, strictly hand made.

REPAIRING NEATLY DONE

DAVENPORT STREET

UP-TO-DATE

PLUMBING

SUCCESSFUL

HEATING!

LOWELL & BROSS

TELEPHONE 232

THE NEW LUTHERAN CHURCH

Formal Dedication to Take Place Early in November.

Work on the new church that is being built on Stevens street by the German Lutheran society of this city is progressing as fast as is possible, it being the intention of the contractors to get the building ready for occupancy by the 1st of November if possible.

The German Lutheran congregation is one of Rhinelander's prominent religious societies and for many years past has held its meetings in the little church on Mason street on the north side. The society now numbers nearly thirty-five families and has grown to such proportions that the building it has occupied heretofore is entirly too small. The corner stone of the new edifice was laid July 2 appropriate services being conducted in the German and the English language.

In dimension the building is thirty feet wide by sixty-four feet in length, and will comfortably seat three hundred people. The total cost will be in the neighborhood of $4,400.

T. J. DeJung, of Cameron, a brother of Rev. DeJung, the pastor, has the contract for the work and expects to have the building completed in about four weeks. The pulpit and seats were ordered last Thursday and as it will be at least sixty days before delivery can be made, it is not probable that the formal dedication will take place before early in November. The style of architecture followed is strictly along the Gothic lines.

REMINISCENT.

The rummage sale of the Ladies Aid society of the Congregational church held Tuesday and Wednesday just across the street from the editorial sanctum, reminds the writer of an editor of another town in Wisconsin whose better half was a tireless church worker. This editor possessed two suits of clothes, a "good" suit and an every day suit, but as times were hard, both looked like every day suits and it was hard to distinguish between them. The editor sauntered into a rummage sale of his church one day and discovered his "other" suit displayed for sale. It took an immediate hustle on his part to raise the necessary amount of this world's goods to "lift" the "other" suit, but he made it and took it home, making no comments to his better half and the matter was apparently forgotten. Another rummage sale was on deck after a time and this editor selected his wife's best garment and succeeded in placing it on sale unknown to her. Well, she discovered it in due time, and she told him a few things of a personal nature that he already knew, and took her clothing home. There is now one man on earth, whose wife goes into the rummage business once or twice a year, who does not miss any of his worn, but "comfortable togs" after a rummage sale, and this remedy in moderate doses is respectfully suggested to heads of households who have to do without things after rummage sales.

MUSICAL SERVICE.

At the Congregational church last Sunday evening the regular sermon was omitted by Rev. Wilson, a musical service being substituted. The church was well filled, nearly every pew being occupied, and the violin selections by Mr. Carl Hillman of the Thomas Orchestra, Chicago, were much appreciated. The choir rendered some musical numbers as did also a quartet composed of Mrs. J. J. Reardon, Miss Lillian Foster and Messrs. Tompkins and Briggs. Miss McRae sang a solo, and Mrs. Reardon sang "The Holy City" in an able and pleasing manner.

THE CITY ACCEPTS IT

At a special meeting of the city council last Friday evening it was unanimously decided to accept the proposition of the Robbins Lumber Company to build and have in operation a sash door and blind factory within a stated time. This factory will bring a number of families to Rhinelander and be of considerable benefit to the city. At the next regular meeting of the council the necessary funds will probably be appropriated and the agreements made.

CHILD FRACTURES SKULL.

The eighteen months old son of Mr. and Mrs. Frank Davis, 24 Brown street fell from a second story porch to the ground Sunday evening, sustaining a serious fracture of the skull. Dr. Garner attended the little sufferer and while the fracture is of a very serious nature, the chances are bright for its recovery. The child was unconscious for three hours.

DISLOCATES SHOULDER.

H. G. Galliger, an employe of the Robbins mill met with an accident early Monday morning that resulted in a dislocated shoulder. While not of a serious nature, still the injury is a very painful one and will lay Mr. Galliger up for several days.

TWO DEATHS FROM APPENDICITIS

JAMES MCMAHON.

James McMahon, aged eighteen years, died Sunday at St. Mary's hospital in this city from an acute attack of appendicitis after an illness of about two weeks. Mr. McMahon was removed to the hospital from the home of his parents on north Brown street a week ago Sunday for the purpose of undergoing an operation. His condition at that time was very critical and the operation was postponed with the hope that his condition might improve. His strength failed rapidly, however, and it was decided by the physicians in charge that an immediate operation would be necessary, but the grim messenger of death relieved the sufferer from this world's cares before medical science could be brought to the rescue.

James McMahon was a young man of exemplary habits, popular among the young people, respected and admired by all. Besides his parents, Mr. and Mrs. Wm. Murphy, he is survived by three brothers and one sister, all residing here. The funeral was held from the Catholic church yesterday morning, a large gathering of friends attending to pay their last respects to the deceased.

OLGA GILL.

Olga, the four year old daughter of Mr. and Mrs. Vit Gill, residing four miles south of the city, died Saturday evening after an illness of ten days from appendicitis. The funeral was held Monday afternoon from the residence. The services were conducted by Rev. DeJung of the German Lutheran church, and F. A. Hildebrand funeral director, interment being made in Forest Home cemetery.

FALLS FROM BUGGY.

While on her way blackberrying in company with her children Tuesday afternoon, Mrs. Carls. Roepcke, was thrown from her buggy in decending a hill, sustaining injuries that will confine her to her bed for some time. The accident happened about three miles from the city. Mrs. Roepcke was placed in the buggy by her children and brought home as soon as possible when medical attendance was secured. Although no bones were broken, still her injuries are of a serious nature.

SEND GAME WARDENS AWAY

A report comes from Madison that hereafter game wardens will do very little work in their home counties, but will be sent to other counties where they are not known. It is said that in some counties wardens are so well known that it is almost impossible to catch some violators of the game laws who are constantly on the watch for them. The fish and game department believes that more will be accomplished in the detection of violators if wardens are changed every little while.

SIMONDS-PIER.

Saturday at Milwaukee, at the home of the bride, occurred the marriage of Miss Harriet K. Pier to Chas. G. Simonds of Schenectady, N. Y. The ceremony was performed by the bride's mother, Mrs. Kate Pier, as court commissioner. Both Mrs. Kate Pier and Mrs. Simonds are well known throughout this section where they own considerable land.

SHOE FACTORY RUMOR

There is talk on the streets that this city may receive a proposition from A. Hanson of Three Lakes, in a short time, in regard to his building a large shoe factory here. It is said Mr. Hanson would employ about fifty people if he should decide to come here. It is hoped Mr. Hanson will look favorably upon Rhinelander as the place for his new factory, and decide to make the city a proposition.

For the Land Sake

Buy a home while you can get land cheap. No better or safer investment than land. Northern Wisconsin is rapidly settling up and you will soon be too late to get good land cheap. Don't buy high priced lands and be in debt all your life, buy and let it pay on the rise.

My lands are situated in a good farming community, near good markets, railroads and towns.

I also have a large list of city property for sale, among it the B. L. Horr Addition which are the very choicest resident lots in the city.

For further information,

SEE EBY,

The Land Man about it

Rapids House, Rhinelander, Wis.

TO START IN OCTOBER

The Rhinelander Manufacturing Co.'s plant which has been closed down for some months account of over-production will commence running again early in October. At a stockholder's meeting last week it was decided to start the factory and run it to its full capacity until they can get caught up on orders and get a supply on hand again. E. A. Relk, who has managed the plant for the past year, has disposed of nearly all the refrigerators that were on hand when he took charge and now has orders for hundreds that are not yet made. Mr. Relk is a refrigerator man of considerable ability, and has managed refrigerator plants and handled salesmen before. If the factory again has the misfortune to catch up on orders and has to close down on account of over-production it will be because it is too cold weather to sell refrigerators.

MARKS-MEGOW

Among the pretty home weddings of last evening was that of Miss Lulu L. Megow and Ray M. Marks, of Rhinelander, Wis., which was solemnized at 8 o'clock at the home of the bride's parents, Mr. and Mrs. Robert Megow, 31 Arthur avenue. The house had been prettily decorated throughout, each room individualized by a different color scheme. In the first parlor, where the marriage took place, white and green were the only colors used. Ferns and palms banked the window, while great clusters of hydrangea blossoms and white astors were placed at intervals and the mantel was entirely hidden by the lovely flowers. The second parlor was in red, a profusion of red astors being used, while in the dining room quantities of golden glow and golden rod gave the desired color effect in yellow. Ropes of smilax intertwined with yellow daisies massed the chandelier and extended to the center of the table, where a great bed of yellow daisies and ferns were placed.

Rev. James S. Wilson, of Merrill, Wis., read the service, and the bridal music was played by Miss Daysie Schwartz. Just before the ceremony Miss Angie Mallett sang two solos, "O, I'romise Me" and "Your Voice".

The bride wore a fluffy gown of white silk mull, tucked, with insertion and trimming of valenciennes lace and carried a large bouquet of bride's roses. She was attended by her sister, Miss Jennie Megow, as maid of honor, who wore a gown of cream voile over cream silk and carried pink roses. Albert F. Marks, of Park Falls, Wis., was best man. About one hundred and fifty guests were present.

At the reception which followed the ceremony Mr. and Mrs. Marks were assisted in receiving by Mr. and Mrs. R. Megow, Mrs. M. F. Marks of Odanah, Wis., and Mrs. G. C. Eckel of Merrill, Wis. Assisting through the rooms were the Misses Fleet, Boehlmer and Jennie Megow.

Among the out of town guests were Frank Megow, of Independence, Iowa; Mrs. J. G. Wenzel, of Merrill, Wis., and Oscar Sebank, of Redwing.

Mr. and Mrs. Marks will leave Saturday for Rhinelander where they will receive formally after Oct. 1st.—Minneapolis Tribune.

LOTS HALF GONE

About half the lots in B. L. Horr's addition have been sold and considerable building will be done there next season. Mr. Horr is erecting two residences there now which will be for rent when completed.

Dick Guilday will build a house on one of those lots soon. Larry Eagan's house on land adjoining is just completed and ready for occupancy. Ira Cass will build a house on the north side of the track. Altogether there is considerable building going on and more contemplated in that vicinity. Next year will be the banner year for residence building in that locality, it is predicted, and in the whole city in fact.

FOR RHINELANDER IN 1906

Max Zimmerman and John Greenwood leave this morning for Merrill to attend a meeting of the Northern Wisconsin picnic association of the Modern Woodmen. This association has a picnic of lodges in Northern Wisconsin once a year, and Messrs. Zimmerman and Greenwood have been instructed by the local lodge to use all honorable means to secure this picnic for Rhinelander in 1906.

RECEIVES NEW FUNERAL CAR.

F. A. Hildebrand received a new hearse last week for use in connection with his undertaking establishment. The vehicle is from the Jas. Cunningham Son & Co., Chicago. Is mounted with silver trimmings, and is by far one of the finest funeral cars in the northern part of the state.

CARD OF THANKS.

We wish to thank the friends and neighbors, the members of Co. L, and the several lodges whose kindness and sympathy were extended to us in our late bereavement.

MRS. KATIE IRKK AND FAMILY.

Rickmire's Land Agency,

Rhinelander, Wis.

8 room house and two lots with barn $750.00.

11 room house with good cellar and lot near Soo depot $1100.00.

Large two-story house in fine condition and corner lot on south side $2800.00.

7 room house in good condition and lot, barn on lot, not far from first viaduct $750.00.

16 room house, good location, modern conveniences $1800.00

Call on me if you want to buy, sell, trade city property or farm lands. A large list to select from.

Fire Insurance written for one of the oldest companies doing business in the state.

List your Farm Lands and City Property With Me.

A. P. RICKMIRE, Proprietor.

Merchant Tailor

NEW FALL AND WINTER PATTERNS NOW IN

Exclusive Styles.

Order Now For that Fall Suit

E. A. KAPELSKI

107 RIVES ST.

RHINELANDER, - WISCONSIN

JAS. TRUMBLE

Practical Bricklayer and General Building Contractor

ESTIMATES MADE ON ALL KINDS OF WORK.

Grate, Mantel and Fire Place Work A Specialty.

Work Figured Closely.

230 Grant St. Phone 75-1

RHINELANDER, WISCONSIN.

ONE THREATENS TO SHOOT, THE OTHER TO USE POISON.

The time in Judge Browne's court Tuesday morning was occupied in hearing a case brought against Rudolph Donnerstag, a resident of the town of Woodboro, by one Frank Miller, a resident of the same town. It appears that Donnerstag and Miller became engaged in an altercation Monday and that during the heat of the argument Donnerstag pointed a gun at Miller, threatening to shoot him. Miller decided that discretion was the better part of valor and came to town to secure a warrant for his neighbor's arrest. In retaliation Donnerstag had Miller arrested on a charge of threatening to poison him. The case was continued for one week, but in the meantime, we understand, a reconciliation has been effected between the two and they are now living in harmony with each other once more.

BOUGHT THE STOCK.

Carling and Jewett have purchased the jewelry stock of T. Hirzy and will soon have the stock now in transit on display at their store on Brown street. Heretofore this store has only handled goods in the musical line, but hereafter they will carry an up to date line of jewelry as well.

STORIES OF THE FAKIRS

By

J. P. JOHNSTON

Author of "Twenty Years of Hustling," "What Happened to Johnston," Etc.

CAUGHT A VICTIM.

The Ingenious Way In Which a Patent-Right Gang Separated a Farmer from His Money.

(Copyright, 1905, by Joseph B. Bowles.)

One of the first patent right bunko schemes I ever heard of came under my observation, when I was about 17 years of age. I had traded a $50 note, which I held against a farmer, living near my home in Ohio, for the rights for the state of Illinois in a patent gate and door spring, and went to that state, among relatives, to sell the spring attachments and to dispose of the territory. On arriving at the home of one of my farmer relatives, I found them all in a turmoil, and in a frame of mind to lynch anyone in the patent right business.

CALLED IN TWO OR THREE NEIGHBORS AS WITNESSES AND BROKE OPEN THE VALISE.

A few days before my arrival, a very slick, well-dressed gentleman had called upon one of their rich neighbors, and represented himself to be the general agent of a washing machine. He was anxious to establish an agency for the sale of both the machine and county or state rights, and said to the farmer:

"Now, sir, you have been recommended to me as being just the man I am looking for, and to start with, I want to assure you that I don't propose to give you a penny of my money, nor do I ask for a penny of yours. I don't propose to give you my signature, nor do I ask for yours. I simply propose to appoint you our agent. I will give you three dollars in cash for every machine which you sell, and will leave this sample with you, charging you nothing for it. And for each county right you dispose of, I will allow you all over $100 a county, that you get for it. If you get $200 a county, you will make $100 profit. If you sell a county for $150, your profit will be but $50. I do not limit you as to price on the county rights, but the price of machines must be no more nor less than five dollars each. As I shall be at the —— hotel, at Aurora, for the next six weeks, should you find a customer, you may call on me there, and by paying the cash, you can procure any number of machines, at two dollars each, or whatever counties you want, at $100."

HE AND HIS GUEST DID A GOOD-SIZED WASHING.

Two days later, a gentleman of fine address called. He was about 20 years of age, wore a silk hat and a tailor-made suit of clothes, was glib of tongue, and carried a fair-sized valise. He came just at dusk, and introducing himself as a fire insurance agent, explained that he was traveling on foot, was somewhat tired and weary, and wanted to procure supper, lodging and breakfast.

After supper, and during the evening, while talking fire insurance, and after having displayed his papers, blank applications, door plates, etc., he began discussing other subjects, and topics of the day. Directly he remarked that he intended to resign his position with the insurance company, and engage in something where he could make money faster, and alluded to a former experience in which he had made a lot of money in a short time, handling a patent right.

This, for the first time, reminded the farmer that he was agent for a mighty fine patent, and forthwith he brought out the washing machine the general agent had left with him.

The following morning the insurance agent explained in a worn-out, exhausted manner, that he had not slept more than an hour, and then had dreamed of selling washing machines galore, and township and county rights by the score.

While at the breakfast table, he ventured to ask the farmer, what he could sell him 20 counties for, and producing a state map, he selected the counties he wanted. The farmer carefully thought the matter over, and although he thought $300 a county would enable the insurance man to make plenty of money, by cutting them up into township rights, still he would let him have them (if he took 20 counties) at $200 each.

The insurance man thought the price rather high, and dickered along until about eight o'clock in the morning, when he made the farmer a point blank offer of $150 a county, for the 20 counties. He said, as he did so, that he had formerly been a school teacher in a place several miles south, which point he was making for, as he wanted to collect some money due him. He explained that, as the farmer would have to procure papers from the general agent, before he could deed them to him, he would return in three days, or four at the outside, and receive the deeds and settle in full for them. And as evidence of good faith, he brought out his valise, and unlocking it, took out a large roll of bills with four or five $100 wrappers, and said:

"To show you that I mean business, I will deposit $100 with you, and when I return, and you have the deeds ready, I will pay the balance."

Then placing the roll of money back in the valise, he locked it, and was apparently ready to start, when the farmer's wife remarked that she should think he would be afraid to carry so much money around in that way.

"Yes," he replied; "but I am more afraid of banks, and for that reason, I want to invest in something that will make me a good paying business."

At this juncture, a young man rapped at the door, and when admitted, began introducing a wall bracket, in which to place newspapers, etc. He explained that he traveled with a horse and buggy, and was taking orders, to be delivered inside of 30 days, whereupon the insurance man asked him in which direction he was going. The bracket man, pointing south, said: "This way."

"How would you like company for a short distance?" asked the insurance man. "I am going south, but I am traveling on foot, and if agreeable to you, should like to ride with you."

"Very well," said the bracket man, "only too glad of your company."

After taking the farmer's order for a bracket, he remarked that he was ready to go. The insurance man, turning to the farmer, inquired the amount of his bill. Being informed that there were no charges, he politely invited the farmer to accompany him to the gate.

"You may slip your valise under the seat," said the bracket man. This the insurance man did, and after a cordial good-by to the farmer, and assuring him of his prompt return within three or four days, he entered the buggy. But, instead of going south, the bracket man turned about and started directly north.

"Hold on!" cried the insurance agent. "This isn't south; you are going north, and I must go south."

Bringing his horse to a stop, the bracket man apologized profusely for his blunder, and declared that north was the only direction he could go, as the territory south didn't belong to him. Of course, there was nothing else for the insurance agent to do, but get out, and, reaching under the buggy seat he brought forth his valise.

By this time the farmer's wife and all the children were at the gate, and all were interested and amused over the incident. The insurance agent once more bade them good-by, and started off on foot. Suddenly, however, he turned about, and, in a hesitating way, scratched his head, then returning to the gate, where the whole family was still congregated, he said:

"See here, I really don't like to be carrying this stuff around, and I want you to take this valise, and lock it up until I return. I have money enough in my vest pocket to last me until I get back."

Only too glad of the opportunity, the farmer did as requested, when once again the insurance man bade them another good-by, and started off.

The farmer, now absolutely sure of making the deal, immediately hitched up his best team and drove pell-mell to Aurora, where he found the general agent in his room at the hotel, in business up to his ears. There were before him charts and letters galore, from all sections of the country, some wanting one county, some another, and all in desperate straits for more or less territory. Under much excitement, the farmer explained that he wanted 20 counties at once, and produced a slip of paper with the names of those desired.

After coolly looking over the list, and then going over the state map, the general agent remarked that he was sorry, but he had received a letter that very morning from two men in Galesburg, who wanted ten of those very counties, together with 20 others, and were ready with the cash to take them.

"But," protested the farmer, "you agreed that I should have all the counties I wanted at $100 each. These men, who make you this offer, are a long distance from here, while I am on the spot, and mean business."

"Have you the cash to pay for them?" asked the general agent.

"I can get it within 20 minutes," gasped the farmer.

"Well," replied the general agent, "I hate to do it, because I am certain it will spoil the other deal; but go ahead, get your money right away, and I will make out your papers, and have them ready on your return."

The money was forthcoming, and the deed duly executed and witnessed, and the farmer hastened home to await the return of the insurance agent. At the expiration of four days there was anxiety depicted on the face of the farmer, and an "I told you so" look on the face of the wife. Another day, and both were walking the floor. Two days more and an excited visit was made upon my farmer relatives, when the entire transaction was fully narrated and discussed.

The farmer knew that he had the cash, and possibly hundreds of dollars, if not thousands more than was due him, there in the house, locked up in that valise, but the question was, why should the man stay away, and if he didn't return, what would be the proper and legal procedure to take.

Two days before my arrival, the farmer again visited Aurora, to find that his general agent had flown. He consulted a lawyer, who advised him to immediately return home, call in two or three neighbors, as witnesses, and break open the valise.

His advice was followed, and when opened, the valise was found to be filled with three or four old shirts, in which were wrapped two or three bricks. The balance of the space was stuffed with excelsior.

The reader will readily understand the state of mind my dear farmer relatives were in, to receive and entertain me, a patent-right vender.

After a short visit with them, I started out with my patent, and a few weeks later arrived at Bloomington, where I took quarters at a hotel.

While showing the invention I was representing, a young man entered into conversation with me, and explained that he was canvassing for a book, and he then went on to tell me of a brother of his, who was out with a gang of patent right men, selling washing machines, and how his brother played the part of bracket salesman; and how he would drive up to the farmer's house, in the morning, with horse and buggy. Under the seat of the buggy was an exact duplicate of the valise in which the insurance agent carried his money, and this, of course, was the one the agent withdrew from under the seat after discovering that they were going the wrong way.

Accounts for the Mystery.

"And so the Romans once invaded Great Britain," said Miss Gillgal, to whom her Uncle Charles had been reading of Caesar's conquests. "That accounts for it, then."

"Accounts for what?" asked Uncle Charles.

"For there being so many Latin words which resemble our English ones. The Romans very naturally picked up a good many of our expressions while in England. Wonder I never thought of that before."—Boston Transcript.

Hard to Keep Track of Them.

"Do you remember, dear," he asked, as they sat down on one of the rustic seats at the summer resort, "that I cut our initials on this tree behind us three or four years ago?"

"Why, no, George," she replied. "I don't remember that. Are you sure?"

He arose, walked around the tree, and inspected the bark closely.

"Yes," he said. "It's the tree, all right, but it was another girl."—Chicago Tribune.

From Experience.

Russian Duke—I had to leave Russia. You don't know how you feel when thousands of people wait the chance to hit you with something.

Correspondent.—Oh, yes, I do. I used to be baseball umpire in America.—Chicago News.

A LESSON IN MANUAL TRAINING

PRACTICAL POINTS FOR BOYS WITH AMBITION AND GENIUS.

The More Perfect the Polish on the Surface of an Article the More Plainly Are Defects Shown—Patient Practice Needed to Insure Satisfactory Work in Making Joints—Different Kinds of Joints and How to Make Them.

BY JAMES RITCHIE.

(Instructor in Woodworking and Pattern-making, Armour Institute of Technology, Chicago.)

(Copyright, 1905, by Joseph B. Bowles.)

As may be seen from the few examples we have given in making different articles out of wood, a great deal of skill is required in using the tools so as to produce work in which the joints will be firm and close-fitting and all surfaces true and smooth.

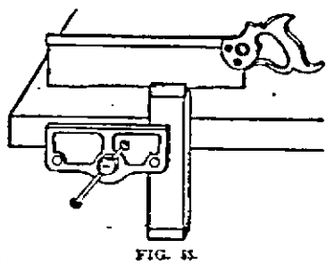

FIG. 83.

Nearly all beginners think that when the grain is slightly torn out or the surface is a little rough and uneven the filler and the varnish will cover up and hide all defects, correct all disfigurements of the wood and make everything perfect. All experience has proved that this is a very great mistake, as the filler and varnish or wax bring out and magnify the slightest defects, so that the more perfect the polish and finish put on the surface of any article the more pronounced will be every defect which has been allowed to remain in any of its surfaces, joints or other connections.

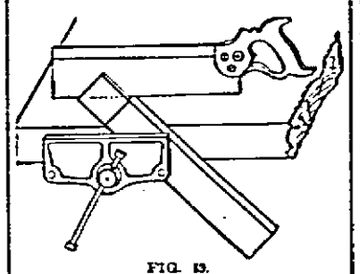

FIG. 89.

For this reason all the pieces which go to make up any article must, after planing, be scraped until all defects disappear, then thoroughly sandpaper, first with medium and lastly with very fine sandpaper.

In the matter of joints, such as mortises and tenons or other connections for the several parts of an article, only long continued and patient practice will enable anyone to do satisfactory work, and we wish now to take up the subject of joints of different kinds, some of which have been needed in the construction of work already described.

As a means for teaching the worker to cut his shoulders for his tenons true and close to the line, there is nothing which will help him to acquire skill so rapidly as the exercise and directions given in connection with Fig. 24. Read over and over again the instructions there given, and continue to use the back saw on that or a similar exercise, until the shoulders of any tenons can be cared true and close to the knife line. Under no circumstances saw just a little way from the line with the intention of trimming up to the line with a chisel. Satisfactory work cannot be done in this way. Compel the saw to cut a perfect shoulder for the tenon, and if it will not do so, be assured that the fault is not in the saw, but because of the lack of sufficient practice in its use by the operator.

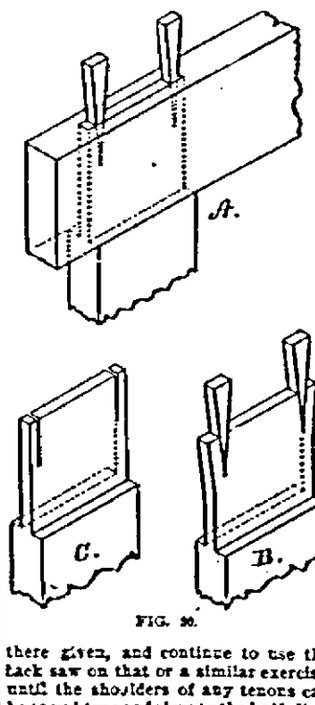

FIG. 90.

After the shoulders of a tenon have been cut, if the tenon is short, say ½ to 1 inch in length, the piece is placed in the bench vise, as shown in Fig. 88, and the sides of the tenon are sawed down to the shoulders, always sawing in the waste wood, but close to the line, the same as when sawing the shoulder. It will be necessary to use for this purpose a back saw, having teeth filed to cut with the grain, the shape of the teeth being the same as in a rip hand saw. Such work always makes it necessary to have two back saws, one filed to cross cut and another to rip. When the piece is held in the above position, only the lines on the top end and on the edge toward the operator can be seen while sawing, and for this reason it is customary, especially when the tenons are long, to tilt the piece in the vise, as shown in Fig. 89, in which position the same lines will be seen and the saw kerf is made in a triangular manner as shown, until the shoulder is reached, when the wood is reversed and the same process repeated. Then place the piece vertically and complete the whole cut.

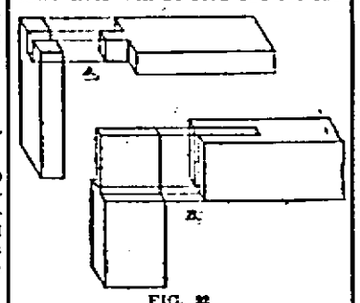

FIG. 92.

In carpentry, when the mortise and tenon extend through and through the side piece of a frame it is the usual practice, for the purpose of securing greater firmness and strength, to wedge the tenons as shown at A in Fig. 90. The wedges spread the tenon, making it slightly wider at the end than at the shoulder, as illustrated at B, compressing the fibers of the wood and forcing the edges of the tenon against the ends of the mortise. To prepare the tenon for the wedges, two thin saw kerfs are made with a back saw about one-third way down its length, as shown at C. The points of the wedges should be dipped in glue before driving, when they will each become a part of the tenon and add greatly to the strength of the framing.

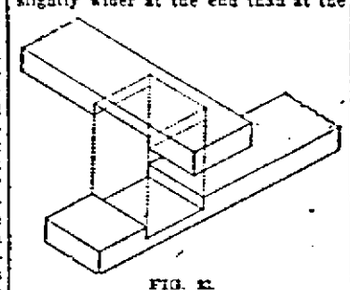

FIG. 93.

Avoid the mistake so often made, especially in books of instruction in carpentry, of placing the wedges between the edges of the tenon and the ends of the mortise, as shown at D in Fig. 91. In this position the wedge lessens the strength of the frame, the tendency being to compress and to make the tenon tapering—narrower at the end than at the shoulder, as shown at E—and to drive it out of instead of drawing and holding it in the mortise as at A in Fig. 90.

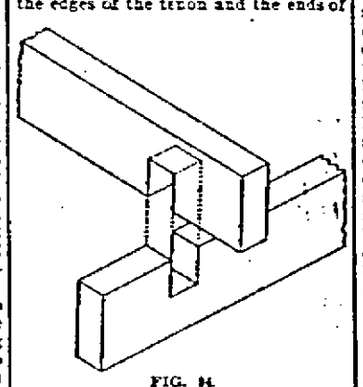

FIG. 94.

The "slip tenon" joints shown at A and B in Fig. 92 will afford excellent practice in sawing. The wood for A should be 2 inches wide and ¾ or ⅞ inch in thickness. Lay out all cross lines of the joint with a knife and try square, and use the mortise gauge for the lines which run lengthwise of the grain and across the ends. Saw the sides of the mortise from the end downward and cut out the piece between the saw kerfs as a whole piece, with a narrow chisel and mallet—taking care that all saw kerfs are made in the waste wood and close to the gauge lines. For the joint B the wood should be 2 inches wide and 1½ or 1¾ inches in thickness. The thickness of the tenon should be one-fourth of the thickness of the wood, and for A one-fourth of the width of the piece.

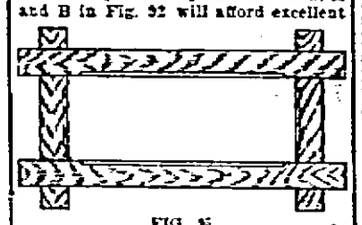

FIG. 95.

These joints should each be made of pine or poplar, and repeated until a good fit can be made by using the saw and, if possible, without trimming and fitting with a chisel.

FIG. 96.

The "half lap" joint shown in Figs. 93 and 94 is much used in carpentry where two pieces must cross each other in the same plane, as in the corners of a frame where all ends project in the manner shown in Fig. 95, or the diagonal stretchers of a table. They afford excellent practice for the combined use of the saw and chisel. They differ only in that the one shown in Fig. 93 is joined on flat, while Fig. 94 is on edge. As an exercise for practice the wood for each should be 2 inches wide, and ¾ to 1¼ inches in thickness. Like A and B, Fig. 92, all lines must be made with a sharp-pointed knife and the marking gauge.

FIG. 91.

Fig. 96 is but another form of the half-lap joint, much used, and introduced here for practice, and to illustrate this form of construction. The wood when used for practice should be 2 inches wide and 1 or 1¼ inches in thickness.

LAND OF THE GUILLEMOTS.

Cliff-Homes of the Birds Where Egg-Gatherers Pursue Dangerous Calling.

Immense and lonely, like the battlemented walls of a forgotten city of giants, Flamborough's white cliffs towered high and sleepy and indifferent above the restless sea which lapped their bases and broke in creamy foam on the submerged rock fragments at their feet. Strangely like are those cliffs to the work of man—towers and bastions and barbicans great flanking walls of solid white masonry, 500 courses high; here and there narrow Gothic arches, flying buttresses and all the intricate stonework of an old cathedral. Who laid those beds of huge stone with the regular mortar-like interspaces?

"It was all deposited as a sea bottom," says my geological companion, as we scramble along the grassy top with a perpetual quiver of fright at the tremendous depths beneath, relates a London writer.

But if so, how comes it that those thin horizontal layers of darker color are so regularly spaced? Did the sea hold a sort of centenary carnival and deposit gravel instead of chalk for a few months at the end of every hundred years?

These lonely rocks are not really lonely. They are the cities of the guillemot, and every ledge and nook and recess in their steep battlements is crowded with those quaint clumsy birds. Down on the green water below guillemots are sprinkled thickly as though by a pepper box, squabbling and disputing and chattering with a terrible din. On the ledges they stand in their white-breasted thousands, surveying the great flat sea like the Arab in his snowy burnoose looking out over the desert. And on little patches of grass are their green and tawny eggs, bigger than a hen's, and pointed at one end like a peg top so that they shall not roll off.

And now we have a thrilling sight. For one of the egg gatherers is going to descend. Tall, brawny, bearded, with big helmet to save his head from loosened stones, he is let down at the end of a rope, and walks backwards down the rough perpendicular cliff. At each step he bounces himself away from the rock, sometimes ten yards or so, and yet he always manages to swing back on the other foot. As he descends showers of birds fall off the cliff, for the guillemot turns a backward somersault into the air, when he wants to fly. It is a fearful sight to see that man swinging lower and lower till he gets no bigger than a bird, swinging to a ledge, picking up a few eggs, and putting them into the satchel on his back, and always managing to approach those jagged rocks feet foremost. At last he jerks the rope and begins to walk upward, bringing enough eggs to fill a large market basket. And after this desperate adventure one egg in five goes to the landowner for rent.

Small Reward for Pole-Finders.

Mr. Peary, in the Roosevelt, the most powerful boat that ever steered for the wintry seas of the Arctic region, is about to "make another try for the pole." The commander of the Roosevelt admits in an interview that the reward for the pole-finder is largely sentimental, and intimates that the hunt for the pole is the real joy of the game. It is well for the world, after all, that it lacks not strenuous souls who find part compensation at least for hardships and danger in "a bully time" and who do not inquire too closely whether the adventure is "remunerative," but who wade in where the hazard is the greatest, and perhaps because it is the greatest.—Boston Globe.

Baggage Easily Identified.

Some English tourists who are in the habit of traveling with a good many trunks have a way of marking their baggage for identification purposes which looks strange to American eyes. It is not at all unusual now to see landed on the steamship piers a big pile of trunks and bags, around each of which will be a stripe of some vivid color. A bright red stripe around a sole leather trunk may look queer, but its usefulness is apparent in the ease with which the baggage is picked out by the owner. An Englishman who came over recently had his trunks not only decorated with a white stripe, but on the top of each was his coat-of-arms in colors. His baggage was handled with much dispatch.—N. Y. Sun.

It Depends.

De Peyster (they have been conversing on art topics)—Are you fond of majolica, Mrs. Parvenue?

Mrs. Parvenue (who has made several bad mistakes since her entrance into society, and is on her guard)—Well—er—that depends entirely on how it is cooked.—Chicago Journal.

Obedience of Children.

In a recent public address the archbishop of Canterbury said: "The child who has not learned obedience at the age of two never learns it. The child of 18 months out late at night in the perambulator, whose mother said: 'It won't go to bed till we do,' had begun the education of its parents very early."

Preparing a Southern Breakfast.

"What's that pounding in the kitchen?" asked the boarder. "Trying to make my steak tender?"

"No," replied the landlady; "the cook discovered some microbes in the meat, this morning, and she's trying to kill 'em!"—Yonkers Statesman.

So with All Suicides.

A man who stands before a mirror to kill himself makes a coroner's jury unnecessary in his case. No matter what the means, morbid egotism was the cause of death.—St. Louis Globe-Democrat.

DISFIGURING HUMOR.

Brushed Scales from Face Like Powder—Doctor Said Lady Would Be Disfigured for Life.

CUTICURA WORKS WONDERS.

"I suffered with eczema all over my body. My face was covered; my eyebrows came out. I had tried three doctors, but did not get any better. I then went to another doctor. He thought my face would be marked for life, but my brother-in-law told me to get Cuticura. I washed with Cuticura Soap, applied Cuticura Ointment, and took Cuticura Resolvent as directed. I could brush the scales off my face like powder. Now my face is just as clean as it ever was.—Mrs. Emma White, 641 Cherrier Place, Camden, N. J., April 25, '03."

In the course of an address to students on one occasion Lord Kelvin, the great British scientist, uttered this epigram: "The end of education is twofold—First, to help man to earn a living, and, second, to make his life worth living."

Chicago, September 2, 1905.—With the conclusion of peace negotiations at Portsmouth, and the early ratification of a treaty between Russia and Japan, the Chicago & North Western is understood to have ordered rushed to completion a large order for new equipment for the Overland Limited, their crack every-day-in-the-year train between Chicago and San Francisco. This in expectation of a large volume of traffic to and from the Pacific Coast, due to the immediate commercial expansion that is anticipated.

"Education," said Uncle Eben, "ain' no benefit to a young man if it stahts him recitin' Shakespeare when he ought to be mixin' de whitewash."—Washington Star.

Ward Seminary, Nashville, Tenn., offers your girl a first-class education at cost. Patrons get the profit. You can't get so much for the money elsewhere. Write at once for Book of Information.

A stable disposition together with horse sense generally gives a man a pretty good position in the human race.—Puck.

STOP, WOMAN!

AND CONSIDER THE ALL-IMPORTANT FACT

That in addressing Mrs. Pinkham you are confiding your private ills to a woman—a woman whose experience with women's diseases covers a great many years.

You can talk freely to a woman when it is revolting to relate your private troubles to a man—besides a man does not understand—simply because he is a man.

Many women suffer in silence and drift along from bad to worse, knowing full well that they ought to have immediate assistance, but a natural modesty impels them to shrink from exposing themselves to the questions and probably examinations of even their family physician. It is unnecessary. Without money or price you can consult a woman whose knowledge from actual experience is great.

Mrs. Pinkham's Standing Invitation.

Women suffering from any form of female weakness are invited to promptly communicate with Mrs. Pinkham, at Lynn, Mass. All letters are received, opened, read and answered by women only. A woman can freely talk of her private illness to a woman; thus has been established the eternal confidence between Mrs. Pinkham and the women of America which has never been broken. Out of the vast volume of experience which she has to draw from, it is more than possible that she has gained the very knowledge that will help your case. She asks nothing in return except your good-will, and her advice has relieved thousands. Surely any woman, rich or poor, is very foolish if she does not take advantage of this generous offer of assistance.

If you are ill, don't hesitate to get a bottle of Lydia E. Pinkham's Vegetable Compound at once, and write Mrs. Pinkham, Lynn, Mass., for special advice.

When a medicine has been successful in restoring to health so many women, you cannot well say, without trying it, "I do not believe it will help me."

SICK HEADACHE

CARTER'S LITTLE LIVER PILLS.

Positively cured by these Little Pills.

They also relieve Distress from Dyspepsia, Indigestion and Too Hearty Eating. A perfect remedy for Dizziness, Nausea, Drowsiness, Bad Taste in the Mouth, Coated Tongue, Pain in the Side, TORPID LIVER. They regulate the Bowels. Purely Vegetable.

SMALL PILL. SMALL DOSE. SMALL PRICE.

CARTER'S LITTLE LIVER PILLS.

Genuine Must Bear Fac-Simile Signature

Brent Good

REFUSE SUBSTITUTES.

The World's Standard

DE LAVAL CREAM SEPARATORS

600,000 In Use. Ten Times As Many As Others Combined.

Save $10.- per Cow Every Year of Her Life over all Gravity Setting Systems and $5.- per Cow over all Imitating Separators.

Send for new Catalogue.

THE DE LAVAL SEPARATOR CO.

Corner Randolph Drive, CHICAGO. 74 Cortlandt Street, NEW YORK.

PAXTINE TOILET ANTISEPTIC

FOR WOMEN

troubled with ills peculiar to their sex, used as a douche is marvelously successful. Thoroughly cleanses, kills disease germs, stops discharges, heals inflammation and local soreness, cures leucorrhoea and nasal catarrh.

Paxtine is in powder form to be dissolved in pure water, and is far more cleansing, healing, germicidal and economical than liquid antiseptics for all

TOILET AND WOMEN'S SPECIAL USES

For sale at druggists, 50 cents a box.

Trial Box and Book of Instructions Free.

THE R. PAXTON COMPANY BOSTON, MASS.

LIEUT. F. S. DAVIDSON.

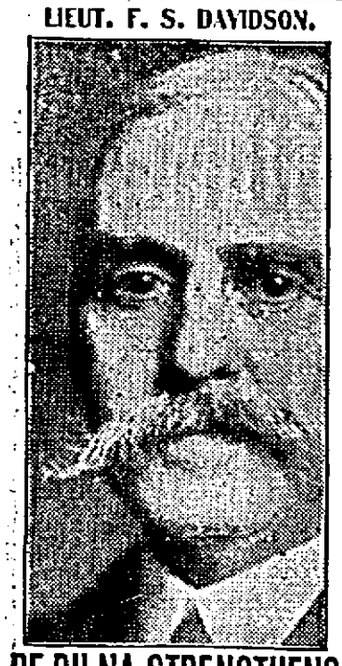

PE-RU-NA STRENGTHENS THE ENTIRE SYSTEM.

F. S. Davidson, Ex-Lieut. U. S. Army, Washington, D. C., care U. S. Pension Office, writes:

"To my mind there is no remedy for catarrh comparable to Peruna. It not only strikes at the root of the malady, but it tones and strengthens the system in a truly wonderful way. That has been its history in my case. I cheerfully and unhesitatingly recommend it to those afflicted as I have been."—F. S. Davidson.

If you do not derive prompt and satisfactory results from the use of Peruna, write at once to Dr. Hartman, giving a full statement of your case, and he will be pleased to give you his valuable advice gratis.

Address Dr. S. B. Hartman, President of The Hartman Sanitarium, Columbus, Ohio.

TICKLESOME TALES.

Prof. Sylvester Burnham was once asked by one of his not very industrious students whether he thought Hebrew would be the language in Heaven. The genial professor replied: "I am not sure; but it would be safe for you to be prepared."

A man who is always on the lookout for novelties, says the St. James' Budget, recently asked a dealer in automobiles if there was anything new in machines. "There's a patented improvement that has just been put on the market," replied the dealer. "A folding horse that fits under the seat."

A lawyer named Patchell recently had a case in an Irish court, where the plaintiff in a breach of promise suit asserted that the defendant kissed her, but that she did not return his salutes. "Well, I never came across a girl like that," remarked Lawyer Patchell. "We won't go into these personal revelations here, Mr. Patchell," said the judge.

Senator Proctor, of Vermont, is reported to have said that the finest speech he ever made consisted of only four words. Senator Hoar in a speech in the course of which he chaffed good-naturedly the senator from the Green Mountain state, made this little thrust: "No man in Vermont is allowed to vote unless he has made $5,000 trading with Massachusetts people." Senator Proctor retorted: "And we all vote."

One of the quaint characters well known to old-timers of Portland, Ore., was Robert E. Bybee, familiarly known as "Bob" Bybee. He was a justice of the peace in Portland for many years. On one occasion, when a jury was being impaneled, one of the jurors, a well-known attorney, asked to be excused because he was a lawyer. "Well," said Bybee, "I guess that all the law you know isn't going to disqualify you from serving."

Always the Way.

"I suppose you expect to win that shaving set at the raffle?"

"No, indeed, it will never come to me because I'd have some use for it. It's bound to go to some fellow who doesn't shave himself."—Philadelphia Press.

HONEST PHYSICIAN

Works with Himself First.

It is a mistake to assume that physicians are always skeptical as to the curative properties of anything else than drugs.

Indeed, the best doctors are those who seek to heal with as little use of drugs as possible and by the use of correct food and drink. A physician writes from Calif. to tell how he made a well man of himself with Nature's remedy:

"Before I came from Europe, where I was born," he says, "it was my custom to take coffee with milk (cafe au lait) with my morning meal, a small cup (cafe noir) after my dinner and two or three additional small cups at my club during the evening.

"In time nervous symptoms developed, with pains in the cardiac region, and accompanied by great depression of spirits, despondency—in brief, 'the blues!' I at first tired medicines, but got no relief and at last realized that all my troubles were caused by coffee. I thereupon quit its use forthwith, substituting English Breakfast Tea.

"The tea seemed to help me at first, but in time the old distressing symptoms returned, and I quit it also, and tried to use milk for my table beverage. This I was compelled however to abandon speedily for while it relieved the nervousness somewhat, it brought on constipation. Then by a happy inspiration I was led to try the Postum Food Coffee. This was some months ago and I still use it. I am no longer nervous, nor do I suffer from the pains about the heart, while my 'blues' have left me and life is bright to me once more. I know that leaving off coffee and using Postum healed me, and I make it a rule to advise my patients to use it." Name given by Postum Co., Battle Creek, Mich.

There's a reason.

PECK'S BAD BOY ABROAD

The Bad Boy Finds Germany Very Much Like Milwaukee—He Plays Mumblety Peg with the German Princes—He Entertains the Royal Family with "a Trick."

BY HON. GEORGE W. PECK.
(Ex-Governor of Wisconsin, Former Editor of Peck's Sun, Author of "Peck's Bad Boy," Etc.)

(Copyright, 1900, by Joseph B. Bowles.)

Berlin, Germany.—My Dear Old Pummernickel.—Now we have got pretty near home, and you would enjoy it to be with us, because you couldn't tell this town from Milwaukee, except for the military precision with which everything is conducted, where you never take a glass of beer without cracking your heels together like a soldier, and giving a military salute to the bartender, who is the commander-in-chief of all who happen to patronize his bar, everybody here acts like he was at a picnic in the woods, with a large barrel of beer with perspiration oozing down the outside, and a spigot of the largest size, which fills a schooner at one turn of the wrist, and every man either smiles or laughs out loud, and you feel as though there

HAPPINESS EVERYWHERE.

was happiness everywhere, and that heaven was right here in this greatest German city. There is laughter everywhere, except when the emperor drives by, escorted by his body guard, on the finest horses in the world, then every citizen on the street stops smiling and laughing, all stand at attention, and every face takes on a solemn, patriotic, almost a fighting look, as though each man would consider it his happiest duty and pleasure to walk right up to the mouth of cannon and die in his tracks for his pale faced, haggard and loved emperor. And the emperor never smiles on his subjects as he passes, but looks into every eye on both sides of the beautiful street with an expression of agony on his face, but a proud light in his eye, as though he would say, "Ach, Gott, but they are daisies, and they would fight for the Fatherland with the last breath in their bodies."

The pride of the people in that mustached young man, with the look of suffering, is only equalled by the pride of the emperor in every German in Germany, or anywhere on the face of the globe. There is none of the "Hello Bill," such as we have in America, when the president drives through his people; many of them yell, "Hello Teddy," while he shows his teeth and laughs and stands up in his carriage, and says, "Hello Mike," as he recognizes an acquaintance. But these same "Hello Bill" Americans are probably just as loyal to their chief, wherever he may be, and would fight as hard as the loving Germans would for their hereditary emperor.

I suppose there is somebody working in Berlin, but it seems to us that the whole population, so far as can be seen, is bent on enjoying every minute, walking the streets, in good clothes, giving military salutes, and drinking beer between meals, and talking about what Germany would do to an enemy if the ever-present chip on the shoulder should be knocked off, even accidentally. But they all seem to love America, and when we registered at the hotel from Milwaukee, Wis., U. S. A., citizens began to gather around us and ask about relatives at our home. They seem to think that every German who has settled in Milwaukee owns a brewery, and that all are rich, and that some day they will come back to Germany and spend the money and fight for the emperor.

We did not have the heart to tell them that all the Germans in Milwaukee were going to stay there and spend their money, and while their hearts were still warm towards the Fatherland, they loved the Stars and Stripes and would fight for the American flag against the world, and that the younger Germans spoke the German language, if at all, with a Yankee accent. Gee, but wouldn't the people of Berlin be hot under the collar if they knew how many Germans in America were unfamiliar with the make up of the German flag, and that they only see it occasionally, when some celebration of German days takes place.

Well, when dad saw the German emperor drive down the great street and got a look at his face, he said, "Hennery, I have got to see that young man and advise him to go and consult a doctor," and so we made arrangements to go to the palace and see the emperor and his son, the crown prince, who will before long take the empire on his shoulders if William is as sick as he looks. You don't have to hire any masquerade clothes to call on the emperor of Germany, like you do when you visit royalty in Turkey and Egypt, for a good frock coat and a silk hat will take you anywhere in the day time, and a swallow-tail is legal tender at night, so dad put on his frock coat and silk hat, just as he would to go and attend an afternoon wedding at home, and we were ushered into a regular parlor, where the emperor was having fun with his children, and the empress was doing some needle work.

Dad supposed we would have to talk to the emperor and the prince through an interpreter, and we stood there waiting for some one to break the ice, when some one told the emperor that an American gentleman and his boy wanted to pay their respects, and the emperor, who wore an ordinary dark suit, with no military frills, took one of the young princes he had been playing with, across his knee and gave him a couple of easy spanks, in fun, and the whole family was laughing, and the spanked boy "tackled" the emperor around the legs, below the knee, like a football player, and the other princes pulled him off, and the emperor came up to dad, smiling as though he was having the time of his life, and spoke to dad in the purest English, and said he was glad to see the "Bad Boy" man, because he had read all about the pranks of the bad boy and bid dad welcome to Germany, and he didn't look sick at all.

Dad was taken all of aheap, and didn't know what to make of the German emperor talking English, but when the ruler of Germany turned to me and said, "And so this is the champion little devil of America," and patted me on the head, dad felt that he had struck a friend of the family and he sat down with the emperor and talked for half an hour, while the young princes gathered around me, and we sat down on the floor and the boys got out their knives and we played mumblety peg on the carpet, just as though we were at home, and all the boys talked English, and we had a bully time. The princes had all read "Peck's Bad Boy," and I think the emperor and empress have encouraged them in their wickedness, for the boys told me of several tricks they had played on their father, the emperor, which they had copied from the "Bad Boy," and it made me blush when they told of initiating their father into the Masons, the way my chum and I initiated dad into the Masons with the aid of a goat.

I asked the boys how their dad took it, and told them from what we in America heard about the emperor of Germany, we would think he would kill anybody that played a trick on him, but they said he would stand anything from the children, and enjoy it, but if grown men attempted to monkey with him, the fur would fly. The crown prince came in and was introduced to me, and he seemed proud to see me, 'cause his uncle, Prince Henry, had told him about being in Milwaukee, and how all the women in that town were the handsomest he had ever seen in his trip around the world, and he asked me if it was so. I referred him to dad, and dad told him the women were the greatest in the world, and then dad made his usual break. He said: "Look ahere, Mister Prince, you have got to be married some day, and raise a family to hand the German empire down to, and my advice to you is not to let them saw off on to you no duchess or princess as homely as a hedge fence, with no ginger in her blood, but you skip out to America, and come to Milwaukee, and I will introduce you to girls that are so handsome they will make you toe the mark, and if you marry one of them she will raise a family of healthy young royalty with no humor in the blood, and you won't have to go off and be say away from home, 'cause an American wife will take you by the ear if you show any signs of wandering from your own fire side, like lots of your relatives have done."

Gee, but that made the emperor hot, and he said dad needn't instil any of his American ideas into the German nobility, as he could run things all right without any help, and dad got ready to go, 'cause the atmosphere was getting sort of chilly, but the emperor soon got over his huff, and told dad not to hurry, and then he turned to me and said, "Now, little American bad boy, what kind of a trick are you going to play on me, 'cause from what I have read of you I know you will never go out of this house without giving me a beareit, and all my boys expect it, and will enjoy it, the same as I will; now let er go."

I felt that it was up to me to do something to maintain the reputation I had made, so I said, "Your majesty, I will now proceed to make it interesting for you, if you and the boys will kindly be seated in a circle around me." They got into a circle, all laughing, and I took out of my pistol pocket a half pint flask of glass, covered with leather, and with a stopper that opened by touching a spring, and I walked around in front of each one of the royal family, mumbling, "Ene-mene-mony-my," and opening the flask in front of each one, and pretty soon they all began to get nervous,

"AND SO THIS IS THE CHAMPION LITTLE DEVIL."

and scratch themselves, and the emperor slapped his leg and pinched his arm and put his fingers down his collar and scratched his neck, and the crown prince jumped up and kicked his leg and scratched his back, and said, "say, kid, you are not hypnotizing us, are you," and I said, "Ene-mene-mony-my," and kept on touching the stopper.

By and by they all got to scratching, and the emperor turned sort of pale, but he was going to see the show through to the end, as long as he had a ticket, and he said, "What is the joke, anyway?" and I kept on saying "Ene mene-mony-my," and walking around in front of them, and dad began to dance around, too, and dig under his shirt bosom and scratch his leg, and they all scratched in unison and laughed, and a little prince asked how long before they would know what it was all about, and I said my ene-menu, and looked solemn, and dad said, "What you giving us," and I said, "Never you mind, this is my show and I am the whole push," and everybody had raised up out of his chair and each was scratching for all that was out, and finally the emperor said, "I like a joke as well as anybody, but I can't laugh until I know what I am laughing about," and he told dad to make me show what was in the bottle, and I showed the bottle and there was nothing in it, and there they stood scratching themselves, and I told dad we better excuse ourselves and go, and we were going all right enough when dad said, "What is it you are doing," and as we got almost to the door I said, "Your majesty, I have distributed, impartially, I trust, in the royal family of Germany, a half a pint of the hungriest fleas that Egypt can produce, for they have been in that flask three weeks with nothing to

DAD LEANED AGAINST A LAMP POST AND SCRATCHED.

eat except themselves, and I estimate that there were a million Cairo fleas in the flask, enough to set up housekeeping in your palace, with enough to stock the palace of your crown prince when he is married, and this is that you may remember the visit of Peck's Bad Boy and his dad.

The emperor was mad at first, but he laughed, and when we got out of the palace dad leaned against a lamp-post and scratched his back, and said to me, "Hennery, you never ought to have did it," and I said, "What could a poor boy do when called upon suddenly to do something to entertain royalty?"

"Well," says dad, "I don't care for myself, but this thing is apt to bring on international complications," and I said, "Yes, it will bring Persia into it, 'cause they will have to use Persian insect powder to get rid of them," and then we went to our hotel and fought fleas all night, and thought of the sleepless night the royal family were having.

Well, so long, old Pummernickel.

Yours truly,
HENNERY.

RUSSIANS LIVING HIGH.

Aristocrats of St. Petersburg Spend Much Time Over Pleasures of the Table.

War or no war, the aristocratic Russian pursues his pleasures with an abandonment that speaks of unlimited resources or unlimited recklessness, says the Pall Mall Gazette. The pleasures of the table are protracted to an inordinate degree. A lunch, in which the courses are plentifully watered with champagne, will spread itself through the afternoon. You may barely escape at five o'clock, though you begin to eat at one. The host never sits down, plying his guests with a succession of good things, liquid and solid. Even the afternoon tea in middle-class circles is a very formidable undertaking. It includes dishes of various sorts, in which meat will certainly figure, and Russian tea, served in a glass with lemon, is but the pale comparison to sparkling champagne. The appearance of the streets tells of wealth, too. No finer equipages exist anywhere than those which, horned with coal-black steeds, dash at full speed, in lofty disregard for the mere foot passenger, down the central strip of wood pavement in the principal "prospects," as the wider streets are denominated. Holding the reins in his two hands, with arms outstretched, the driver, mediaeval in dress, has the summary methods of a Roman charioteer. Indeed, there is something of Imperial Rome in this second capital of the czar.

Deceased Wife's Sister Muddles.

Our refusal to recognize marriage with a deceased wife's sister—which is legal in the Australian commonwealth—has led to many complications in the inheritance of property. And very embarrassing social incidents have happened. One of the most unpleasant occurred during the reign of the late queen. Arrangements had been made by the colonial office for the presentation of an Australian cabinet minister and his wife at court, but when it was found that the lady was a deceased wife's sister the proposed presentation was promptly overruled. Such an episode is not likely to be repeated, for King Edward, when prince of Wales, voted in the house of lords for the legalization of marriage with a deceased wife's sister.—London Chronicle.

Listening to the Fishes.

For listening to the noise made by fishes in the depths of the seas, a Norwegian inventor has devised a telephone to be lowered overboard from fishing boats. With this he claims a fisherman can detect the presence of fish, their numbers and even their kind. Herrings, or smaller fish, when they come in large numbers, make a piping, whistling sound, while cod make a roaring noise. When they come close to the submarine telephone the movements of the individual fish can be distinguished. The instrument consists of a microphone in a hermetically-sealed steel box. It is connected by electric wires with a telephone in the vessel above. Every sound in the water below is intensified by the microphone and conducted by the electric wires to the telephone.—Stray Stories.

The Natural Inference.

"Hello, old man! Getting ready to retire from business life, eh?

"Why, no; I'm not; what makes you say that?"

"I see you've stopped advertising in the newspapers."

And, after thinking this reply over for an hour or two, the merchant went around and renewed his contracts.—Chicago Sun.

Impertinent Poet.

"Why," said Mrs. Oldcastle, "did your daughter break her engagement to that handsome young poet?"

"He insulted us," replied her hostess, as she carelessly ran her fingers through the pages of a $3.50 copy of "Squints and Glances." "In a poem he wrote about her he said she had lambent eyes, and Joshua just wouldn't stand for that, because it was an insinuation about us gettin' rich in the meat business."—Chicago Record-Herald.

In Temptation's Way.

"This is the first time you have been to prayer-meeting in a long time," said the pastor of a colored congregation.

"I had to come," replied Mr. Erastus Pinkby. "I needs strength'nin'. I've got a job whitewashin' a chicken coop an' buildin' a fence around a watermelon patch."—Washington Star.

Billville Baby.

"Bless his heart!" exclaimed the fond mother, as the squalling baby rolled on the floor; "Molly, run out an' kill a rattlesnake an' git a rattle for him."—Atlanta Constitution.

Cure to Stay Cured.

Wapello, Iowa, Sept. 11th, (Special).—One of the most remarkable cures ever recorded in Louisa County is that of Mrs. Minnie Hart of this place. Mrs. Hart was in bed for eight months, and when she was able to sit up she was all drawn up on one side, and could not walk across the room. Dodd's Kidney Pills cured her. Speaking of her cure Mrs. Hart says:

"Yes, Dodd's Kidney Pills cured me after I was in bed for eight months, and I know the cure was complete, for that was three years ago, and I have not been down since. In four weeks from the time I started taking them I was able to make my garden. Nobody can know how thankful I am to be cured or how much I feel I owe to Dodd's Kidney Pills."

This case again points out how much the general health depends on the Kidneys. Cure the Kidneys with Dodd's Kidney Pills and nine tenths of the suffering the human family is heir to will disappear.

An idea sometimes strikes a man when he is down.

I am sure Piso's Cure for Consumption saved my life three years ago.—Mrs. Thos. Robbins, Norwich, N. Y., Feb. 17, 1900.

The social lion is generally a pretty tame one.

NOISES IN HER HEAD

Mrs. Reagan was a Nervous Wreck, But Dr. Williams' Pink Pills Brought Sound Health.

"Before I began to take Dr. Williams' Pink Pills," said Mrs. Mary Reagan, of No. 86 Kilburn street, Fall River, Mass., recently, "I was in and out of bed all the time, but now I stay up all day and do all my own work.

"I was badly run down from overwork. One day noises began in my head and almost made me crazy. My head felt as if a tight band had been put around it, and the pressure and the sounds made me so uneasy that I often had to walk the floor all night.

"My stomach was in bad shape, and I had smothering sensations. At such times my body seemed bloodless, my hands were like chalk and my face turned yellow. The doctor said I had dyspepsia in the worst form. Then my nerves gave way and I was completely prostrated. I frequently suffered from smothering sensations.

"The first box of Dr. Williams' Pink Pills that I used quieted my nerves so that I could get a good night's sleep, which was a new experience for me. Before I began to use them I was a nervous wreck and trembled at the slightest sound. I was so weak that I had to sit down and rest every few steps when I went up stairs. Now I can run up a whole flight at once. The smothering sensations have gone and the noises in my head have stopped entirely. My appearance has greatly improved, for friends who were alarmed on my account before, now say: 'How well you are looking!' My husband spent over a hundred dollars on treatment for me that was worthless, but a few boxes of Dr. Williams' Pink Pills brought me sound health."

Sold by all druggists, or sent, postpaid, on receipt of price, 50 cents per box, six boxes for $2.50 by the Dr. Williams Medicine Co., Schenectady, N. Y.

LIVE STOCK AND MISCELLANEOUS **ELECTROTYPES** In great variety for sale at the lowest prices by A. N. KELLOGG NEWSPAPER CO., 73 W. Adams St., Chicago.

W. L. DOUGLAS $3.50 & $3.00 SHOES FOR MEN

W. L. Douglas $4.00 Gilt Edge Line cannot be equalled at any price.

W. L. DOUGLAS MAKES AND SELLS MORE MEN'S $3.50 SHOES THAN ANY OTHER MANUFACTURER.

$10,000 REWARD to anyone who can disprove this statement.

W. L. Douglas $3.50 shoes have by their excellent style, easy fitting, and superior wearing qualities, achieved the largest sale of any $3.50 shoe in the world. They are just as good as those that cost you $4.00 to $5.00—the only difference is the price. If I could take you into my factory at Brockton, Mass., the largest in the world under one roof making men's fine shoes, and show you the care with which every pair of Douglas shoes is made, you would realize why W. L. Douglas $3.50 shoes are the best shoes produced in the world.

If I could show you the difference between the shoes made in my factory and those of other makes, you would understand why Douglas $3.50 shoes cost more to make, why they hold their shape, fit better, wear longer, and are of greater intrinsic value than any other $3.50 shoe on the market to-day.

W. L. Douglas Strong Made Shoes for Men, $2.50, $2.00. Boys' School & Dress Shoes, $2.50, $2, $1.75, $1.50

CAUTION.—Insist upon having W. L. Douglas shoes. Take no substitute. None genuine without his name and price stamped on bottom.

WANTED. A shoe dealer in every town where W. L. Douglas Shoes are not sold. Full line of samples sent free for inspection upon request.

Fast Color Eyelets used; they will not wear brassy.

Write for Illustrated Catalog of Fall Styles. W. L. DOUGLAS, Brockton, Mass.

Positive, Comparative, Superlative.

"I have used one of your Fish Brand Slickers for five years, and now want a new one, also one for a friend. I would not be without one for twice the cost. They are just as far ahead of a common coat as a common one is ahead of nothing."

(Name on application.)

HIGHEST AWARD WORLD'S FAIR, 1901.

Be sure you don't get one of the common kind—this is the mark of excellence.

A. J. TOWER CO., BOSTON, U.S.A.

TOWER'S FISH BRAND

TOWER CANADIAN CO., LIMITED, TORONTO, CANADA. 352

Makers of Wet Weather Clothing & Hats.

The Most Convenient Way to go to **CALIFORNIA** is to step into a through tourist sleeper at St. Louis and not be compelled to leave the car until California is reached.

This convenience you have if you travel via the M. K. & T. Ry. It will be a pleasure to send you a booklet about the service.

An Exceptional Rate is offered to California from Sept. 15th to Oct. 31st—$25.00 from St. Louis; $23.00 from Kansas City.

If you're thinking of going West or Southwest while the rates are low, write me.

GEORGE MORTON, G. P. & T. A., M. K. & T. Ry., St. Louis, Mo.

MKT

WHEN WRITING TO ADVERTISERS please state that you saw the Advertisement in this paper.

25 CTS. PISO'S CURE FOR CURES WHERE ALL ELSE FAILS. Best Cough Syrup. Tastes Good. Use in time. Sold by druggists. CONSUMPTION 25 CTS.

A. N. K.—G 2091

900 DROPS

CASTORIA

A Vegetable Preparation for Assimilating the Food and Regulating the Stomachs and Bowels of

INFANTS & CHILDREN

Promotes Digestion, Cheerfulness and Rest. Contains neither Opium, Morphine nor Mineral. NOT NARCOTIC.

Recipe of Old Dr SAM'L PITCHER

A perfect Remedy for Constipation, Sour Stomach, Diarrhoea, Worms, Convulsions, Feverishness and LOSS OF SLEEP.

Fac Simile Signature of Chas. H. Fletcher. NEW YORK.

At 6 months old 35 DOSES—35 CENTS

EXACT COPY OF WRAPPER.

CASTORIA

For Infants and Children.

The Kind You Have Always Bought

Bears the Signature of Chas. H. Fletcher.

In Use For Over Thirty Years

CASTORIA

THE CENTAUR COMPANY, NEW YORK CITY.

Where Music Doesn't Charm.

The office boy who thinks that he can make himself popular by whistling all the latest tunes to his employer while he works hasn't tact enough even to be appointed ambassador to England.—Somerville Journal.

Of Interest to Ladies.

The New York Millinery Trade Review in an editorial says that no Jobbing or Manufacturing Center of Millinery Goods has made such rapid strides as Milwaukee. This is principally due to the progressive firm of Bloomenfeld, Locher & Brown Co. The Trimmed Hats and Tailored Hats produced by this firm have been recognized as standard by all of the leading dealers of the United States, being of artistic workmanship, elegant design, dependable quality, and at the same time can be sold at such prices that they can be purchased by any lady. See that the Hats you look at have the Monogram B. L. B. Co. on the label and insist that your dealer show such hats to you. You can make no mistake when you buy one of them. They are all guaranteed style.

Theory aside, few things are more efficiently expiatory of sin than making money at it.—Puck.

A WOMAN'S SUFFERINGS.

Weak, Irregular, Racked With Pains—Made Well and 36 Pounds Heavier.

Mrs. E. W. Wright of 172 Main Street, Haverhill, Mass., says: "In 1899 was suffering so with sharp pains in the small of the back and had such frequent dizzy spells that I could scarcely get about the house. The urinary passages were also quite irregular. Monthly periods were so distressing I dreaded their approach. This was my condition for four years. Doan's Kidney Pills helped me right away when I began with them, and three boxes cured me permanently."

Foster-Milburn Co., Buffalo, N. Y. For sale by all dealers. Price, 50 cents per box.

Constipation

Endangers Life

Deal With the Honest Druggist

When you ask your druggist for Mull's Grape Tonic, a cure for Constipation, Stomach and Bowel Trouble, and he tries to sell you something else which he claims is just as good that is substitution or dishonesty. It is an insult to your intelligence. He does it for profit and not because he cares about your health. No honest druggist will do it.

Stop a moment and reflect before you permit him to mislead you. He is willing to endanger your life and health for the sake of a few pennies. Is he a safe man to trade with? Deal with the Honest druggist who will promptly supply you with what you know you want, and that which you call for.

Until Mull's Grape Tonic was put on the American market there was no cure for Constipation and Stomach trouble. Your Doctor will tell you as much. He knows that a physic won't cure Constipation. Some remedies may act as laxatives and physics, but you and I know from experience that physics are dangerous, that they weaken, that they not only fail to cure but make us worse until finally they lose effect entirely which means paralysis of the Bowels and death by Typhoid Fever, Appendicitis, Stomach, Heart, and Lung Trouble, Rheumatism, Dropsy, Kidney and Bright's Disease, etc.

There are honorable druggists in most every locality, men who will promptly supply you with Mull's Grape Tonic and not try to sell you something else, but should there be no such druggist there we will send you the Tonic direct from this factory without additional expense to you.

If you have Constipation and want to try Mull's Grape Tonic and have never used it, we will send you or any of your friends, who suffer with this affliction, a free bottle. Send us name and address at once while we are giving the first bottle free; we want to prove to you, at our expense, the truth of the claims we make for this valuable remedy.

Use the coupon below at once while we are giving the remedy away. Free to all who have never used it.

FREE GRAPE TONIC COUPON

Send this coupon with your name and address and your druggist's name, for a free bottle of Mull's Grape Tonic, Stomach Tonic, Constipation Cure and Blood Purifier, to MULL'S GRAPE TONIC CO., 147 Third Ave., Rock Island, Ill. Give full address and write plainly. The $1.00 bottle contains nearly three times the 50c. size. At drug stores. The genuine has a date and number stamped on the label—take no other from your druggist.

PRICE, 25 Cts.

ANTI-GRIPINE

IS GUARANTEED TO CURE GRIP, BAD COLD, HEADACHE AND NEURALGIA.

I won't sell Anti-Gripine to a dealer who won't Guarantee it. Call for your MONEY BACK IF IT DOES NOT CURE.
F. W. Diemer, M. D., Manufacturer, Springfield, Mo.

ESTABLISHED 1870.

Minneapolis. { WOODWARD & CO., GRAIN COMMISSION } DULUTH.

Orders for Future Delivery Executed in All Markets.

PUTNAM FADELESS DYES

Color more goods brighter and fainer colors than any other dye. One 10c package colors silk, wool and cotton equally well and is guaranteed to give perfect results. Ask dealer or we will send post paid at 10c a package. Write for free booklet—How to Dye, Bleach and Mix Colors. *MONROE DRUG CO., Lebanon, Mo., Missouri.*

THE NEW NORTH.

PARK & COMPANY, Publishers.

C. M. PARK, Editor and Manager

A wise man has remarked that the possession of an automobile is not a sign that a man has a lot of money, but it is a sure indication that he needs a lot of it.

A newspaper man bought a seat on the New York Stock Exchange the other day for $84,000. Some people have queer tastes. The idea of a man leaving a lucrative position on a country newspaper for that of a Wall street operator.

The letter which certain representatives of the Jews in America have addressed to Mr. Witte is a temperate and weighty appeal for a more sensible treatment of their race. In the light of modern ideas, the conduct of the Russians toward the Jews is cruel, of course, and incredibly unjust, but above all it is foolish. Any government in any country which willfully cultivates the hatred of a large and intelligent body of its people lacks not so much humanity as common sense, though the Russian autocracy has no very striking endowment of either quality.

Three hundred drivers of United States mail wagons in New York City have gone out on a strike, and strike breakers have been called on to break the strike. These drivers have been employed by men who have the contract for hauling the mail from depots to postoffices and as a rule receive from $20 to $45 per month, while the men who take the contracts clear a good fat lump per month on each man. It would seem that the postoffice department could settle this strike very easily, by cancelling the contract, and hauling this mail themselves and paying living wages.

Young Kermit Roosevelt made a great hit on a Burlington train by giving up his lower berth to an aged couple and taking an upper. An enthusiastic press dispatch describes him as the hero of the hour. No doubt. But Master Roosevelt is young and so he is able to sleep well anywhere. Besides, an upper berth is just as good, or bad, as any other berth on a railroad train after you get in it, a popular impression to the contrary nothwithstanding. Besides, again, it seems to run in the Roosevelt family never to stay down below when it is possible to go higher. After all, then, the sacrifice was not great. It was simply unusual.

The civil service commission at Washington insists that no crooked employe shall be deprived of his job providing he can answer the list of nonsensical questions provided by that body. How would it be to deprive the commissioners of a job, and see if this government could not secure people for its departments at Washington without them? What advantage have the people received from the civil service? One thing in particular is noticeable. There has been more grafting, more deals, and more arrests since the establishment of the civil service in the departments than ever before.

The Japanese people as a rule do not feel satisfied with the settlement of the war between that country and Russia and apparently blame this country for assisting the good work to completion. The American legation in Tokio was surrounded by a mob one day last week, several christian churches were burned, and Americans attacked on the streets. It was time the war was ended and no more lives sacrificed. But considering the fact that neither Russia or Japan appear to be satisfied with the result of the peace conference, a person cannot help but remember the old saying in regard to mixing in other people's affairs.

The postoffice department has made a new ruling on mail matter addressed to patrons on rural routes, which will be of great benefit in this country when the reorganization of the system goes into effect this fall. Under the new ruling postmasters are allowed to forward papers, as well as first class matter, from one office to another, where the person addressed is or a rural route. In the many changes from one postoffice to another that will result when the new routes are established, it will require several months for the patrons to have their mail properly addressed, and while there will necessarily be delays, mail of every character will finally reach the party to whom it was addressed.

An exchange tells of an editor who was worth $100,000, and states that it was owing to the fact that he was honest, upright and had a hankering for hard work; his editorials never offended anyone, and his wife's uncle left them $99,998.

WOODSMEN WANTED.

Good wages offered by Baswell Lumber & Manufacturing Co.

Papoose Lake, Vilas Co., Wis.

Enquire at Manitowish. a21-+21

COUNTRY CORRESPONDENCE.

MONICO.

W. M. Moore moved to Antigo Monday.

Dan Cook and B. F. Jillson have a cement sidewalk.

Mike Holleran is visiting friends near Manitowoc.

Miss Alta Taylor went to Rhinelander Saturday.

Miss Nina Cook did shopping in Rhinelander Saturday.

B. F. Dorr of Antigo was in Monico doing surveying last week.

C. W. Taylor left last night for Milwaukee to attend the state fair.

Mr. Elliot of Antigo is visiting his daughter, Mrs. J. P. Warren of this place.

W. M. Taylor of Marinette, Wis., visited his mother and relatives here last week.

George St. Louis of Eagle River finished raising the Northern Hotel Saturday.

HAZELHURST.

Wm. Dessereau returned from Wausau Sunday.

Mrs. Emil Knabe attended the Wausau fair.

Jake Koontz and little daughter took in the fair at Wausau last week.

Mrs. Fred Smith and Mrs. Chas. Steele were Minocqua visitors Sunday.

Mrs. Wm. Stoker and children visited at Wausau from Monday till Saturday.

Mr. and Mrs. Frank Damask returned from a week's visit at Wausau Sunday.

Miss Dora Dessereau left for Merrill Friday, where she will enter High school.

Mrs. A. Moquins has been entertaining her cousin of Black River Falls the past week.

The German pastor from Merrill held preaching services at the M. E. Church Sunday afternoon.

Wm. Fondrick and bride arrived Tuesday. They will go to housekeeping in the house formerly occupied by Mrs. Knabe.

Miss Mollie Bruett who has been visiting at the home of her brother Theo. Bruett, left for her home at Fond du Lac Thursday.

Herman Vachon and Oscar Knabe went to Arbor Vitae Monday where they have been employed as carriage riders until the mill starts at this place.

Among The Churches.

CHRISTIAN SCIENCE.

Service every Sunday at 10:45 a. m. in White's hall North side. Subject of sermon for next Sunday: "Reality". The public cordially invited.

CONGREGATIONAL.

Morning worship, 10:30.
Bible school, 11:45.
North side primary school, 3 p. m.
Evening service, 7:30.

Rev. A. G. Wilson.

FIRST BAPTIST

Morning service and sermon, 10:30.
Bible school, 11:45.
Evening service and sermon, 7:30.
Prayer service Thursday evening.

FREE METHODIST

Preaching, 11 a. m.
Sunday school, 12.
Preaching, 7:30 p. m.
Mid-week prayer service, Friday evening at 7:30.

Rev. D. O. Dietzman.

METHODIST EPISCOPAL

Morning service, 10:30.
Bible school, 12.
Epworth League devotional service, 6:30 p. m.
Evening service, 7:30
Mid-week prayer service, Thursday 7:30 p. m.

Rev. H. T. Wiltsee.

ST. AUGUSTINE'S

Holy Communion, 7:30.
Morning prayer and sermon, 10:30.
Sunday school, 12.
Evening prayer and sermon, 7:30.
The 7:30 a. m. service will be omitted Sunday Sept. 17. The Rev. Mr. Coxa of Antigo will officiate at the 10:30 service. Archdeacon Babcock officiates at Antigo Sunday a. m., returning for the evening service.

Archdeacon Geo. M. Babcock.

ST. MARY'S

Sunday services: Low Mass, 8 a. m.
High Mass and sermon, 10 a. m.
Mass daily during the week, 8 a. m.

Rev. F. Luettschwager.

SUNDAY SCHOOL MISSIONARY

Anyone who desires to have a denominational or Union Sunday school in any neglected community where it is not convenient to attend their respective churches in this or any of the adjoining counties may write to me and I will be glad of an opportunity to serve them.

Peter LaPort,
American Sunday School Union Missionary, Rhinelander, Wis.

SALVATION ARMY

Sunday services: Sunday school, 2 p. m.
Christian praise service, 3 p. m.
Salvation rally, 8 p. m.
Services every night except Monday at 8 p. m.

Capt. Hosking and Wife,
Officers in Charge.

Cured of Lame Back After 15 Years of Suffering.

"I had been troubled with lame back for fifteen years and I found a complete recovery in the use of Chamberlain's Pain Balm," says John G. Bisher, Gillam, Ind. This liniment is also without an equal for sprains and bruises. It is for sale by

Anderle & Hinman.

Stop paying rent, buy your own home on easy terms. See

Barnes-Weesner Agency.

Rhinelander Paper Company will be in the market for peeled hemlock logs and wood next winter to the possible exclusion of unpeeled hemlock. All jobbers are therfor urged to peel their hemlock this season. tf

COUNCIL PROCEEDINGS.

Sept. 5, 1905.

At the regular meeting of the Common Council, held on the 5th day of Sept., 1905.

All members present except Alderman Smith.

Minutes of last meeting read and approved as read.

The Mayor announced his withdrawal of his veto on Aylward Sons Co., bills No. 7167 and 7168 amounting to $351.00 and was such withdrawal duly accepted.

The following bills were presented:

7183	Sam Moberg	$34.00
7184	Chas. Rollain	44.55
7185	Geo. Chesbeck	42.89
7186	Frank Steimer	19.80
7187	Swan Lind	43.05
7188	Emily Jellany	12.24
7189	J. Belange	43.89
7190	John Backstrom	41.25
7191	James Whalen	86.45
7192	John Seraphin	83.20
7193	Geo. Rosemark	28.94
7194	Chas. Rogers	44.72
7195	E. C. Vesey	62.75
7196	James Cannon	4.89
7197	Louis Soderstrom	30.00
7198	William Lewis	32.00
7199	J. Cummings	31.24
7200	A. O. Lyon	45.50
7201	M. O. Berg	19.47
7202	Peter Peterson	78.05
7203	Nick Gerhard	14.63
7204	James Keenan	23.93
7205	Mrs. E. Nelson	1.00
7206	Tullus Baulker	42.00
7207	Hans Anderson	7.45
7208	D. H. Vaughan	2.00
7209	William Payree	23.00
7210	Thos. Fishbeck	25.00
7211	Henry Knapp	23.00
7212	Dunn & Wood	.25
7213	Dunn & Wood	2.50
7214	Thos. Fishbeck	26.25
7215	John Davlie	7.00
7216	William Payree	14.00
7217	Henry Knapp	12.25
7218	Robert Litzle	15.75
7219	John Bloom	50.00
7220	Frank Lawrence	46.50
7221	Con Lynch	2.50
7222	Rhinelander Iron Co.	2.85
7223	Frank H. Nutter	65.95
7224	Oswald Kabriek	25.00
7225	Herman Fethe	28.00
7226	David Logan	33.25
7227	John Roth	10.50
7228	Otto Winquist	15.88
7229	W. D. Joslin	2.00
7230	W. F. Ball	2.00
7231	Hose Co. No. 1	77.00
7232	Hose Co. No. 2	62.00
7233	Mrs. Graham	2.00
7234	Mrs. Graham	4.50
7235	Val. Eschwig	10.60
7236	Mrs. Chas. Nitche	5.00
7237	Peter Phillip	42.00
7238	Joseph Phillip	52.00
7239	Theo. Phillip	7.00
7240	John Phillip	27.00
7241	J. A. Whiting	5.00
7242	John Ross	3.75
7243	John Ross	4.00
7244	Rhinelander Light Co	3.88
7245	Cole and Roger	9.50
7246	Jas. G. Dunn	11.95
7247	Hans Anderson	21.80
7248	J. J. Reardon	4.25
7249	Albert Kadtke	9.25
7250	N. Y. Belt & Pack Co.	450.00
7251	Chi. Fire Hose Co.	450.00
7252	A. D. Sutton	.00
7253	Gust. Swedberg	5.91
7254	Park & Co.	10.50
7255	Barnes & Weesner	8.75
7256	Mike McDermott	2.88
7257	S. Kelly	46.03
7258	Mrs. Kate Didier	1.92
7259	Alex Denover	2.00
7260	Aylward-Sons Co.	11.00
7261	Aylward-Sons Co.	5.50
7262	C. L. Thompson	169.10
7263	Thos. Innes estate	197.30
7264	Thos. Innes estate	220.00
7265	Thos. Innes estate	653.25
7266	G. P. Alexander	18.50
7267	Rhinelander Light Co.	294.00
7269	R. J. Davison	76.80

Moved and carried that bills No. 7266 and 7368 be referred to committee on Fire Department and they to report on same at the meeting of Council to be held on the 8th day of th's month. Carried.

Moved and carried that bill No. 7267 be laid over until the next regular meeting of Council.

Moved by Alderman Divers seconded by Alderman Fecor that the balance of bills be allowed as recommended by the Comptroller and Clerk be instructed to issue orders in payment for same. Carried, all voting aye.

Upon mot on Council adjourned until Sept. 8th, 1905.

Gust. Swedberg, City Clerk.

September 8, 1905.

At the adjourned meeting of the Common Council held on the 8th day of Sept., 1905.

All members present.

The following was read:

To the Mayor and Common Council of the City of Rhinelander:

I would recommend that the City Clerk be instructed to advertise for bids to furnish the City (at the water works station) 600 cords of green, sound 4ft tamarack wood.

Respectfully,
A. D. Sutton, Water Supt.

Moved by Alderman Divers seconded by Alderman A. Roepke that the recommendation be accepted. Carried, all voting aye.

The following was read:

To the Mayor and Common Council, City of Rhinelander:

Gentlemen:—I hereby petition your Hon. Body for permission to erect an addition to my barn situated on lot 3 block 3 of the 1st addition to Rhinelander. Such addition or repairing not to exceed 10 per cent of the original value of the building. Respectfully,

Henry Hetz.

Such petition referred to committee on Fire Department with instruction to give such permission as they deem advisable.

The following was read:

To the Common Council, City of Rhinelander:

Gentlemen:—We the undersigned residents of the Second ward do hereby petition your Hon: Body for to have a sidewalk ordered put in on the south side of Harvey street from Stevens street to Pelham street

Signed by Jacob Miller and others.

Moved by Alderman Whalen seconded by Alderman Johnson that the petition be granted and sidewalk be ordered put in. Carried, all voting aye.

The following report was read:

The Board of Public Works, to whom was referred the matter of opening Oneida avenue across the right-of-way of the Chicago and Northwestern Ry. Co., with instruction to have such street opened, respectfully report that it will be necessary to condemn the land of the Railway Company before such street can be opened and that the accompanying resolution is the proper resolution for the Council to adopt for that purpose.

Respectfully submitted,
Edward Hess, } Board of
A. W. Shelton, } Public
Emil Johnson, } Works.

The following resolution was then read:

Resolved by the Common Council of the City of Rhinelander,

That it is necessary to condemn for public use, for the purpose of extending Oneida avenue in the City of Rhinelander, the following piece of land in said City of Rhinelander, to-wit: A strip of land sixty feet in width extending across the right-of-way of the Chicago & Northwestern Railway Co., from Oneida avenue in the 1st addition on the north side of the said right-of-way to the said Oneida avenue on the south side of said right-of-way, so as to make said Oneida avenue continuous across said right-of-way. And the City Attorney is directed to commence and prosecute the proper proceedings therefor.

Offered by Alderman Emil Thomas.

Moved by Alderman Divers seconded by Alderman Smith that the resolution be adopted as read. Carried, all voting aye.

The following report was read:

To the Mayor and Common Council, City of Rhinelander:

We, the undersigned committee on the Fire Department to whom was referred the bill of R. J. Davison for work done to the new fire wagon, do hereby recommend that the bill be discounted 20 per cent also before the bill is paid that he be requested to put in a suitable set of springs to take the place of the springs that are now in, also that he raise the footboard at least 4 inches. Also that the bill of G. P. Alexander of $18.50 be allowed at $15.

Henry Roepke, } Committee
W. H. Gilligan, }

Moved by Alderman Smith seconded by Alderman Johnson that the bill of G. P. Alex-

(Continued on last page.)

WHERE IS THAT CROWD GOING!

If You Will Observe, You Will Find Them Stringing Into

THE FAIR STORE.

They are the observing buyers who wish to get in early and take advantage of the large bargains now being offered in every line. The exact article you wish may be selected by others if you wait. Come early and get your choice.

Follow the Crowd

They will show you the way to the Great Bankrupt Sale. To give those who have not visited our store an idea how we do business and show you a sample of the bargains to be found, we wish to announce that commencing Wednesday we will give

FREE Your Choice of Articles Shown in Our Window With Each Purchase of a Boys' Suit.

All Standard Brands Calico, regular prices 7c and 8c. on sale Friday afternoon for 3½c

On sale other than Friday afternoon for 4½c.

D. L. SAWYER & CO.

WE WIN THE LAUREL

in competition for beer supremacy with the Rhinelander brand. Purity, palatability and all 'round excellence prove our claim to first prize for all that's best in beer. Singularly enough our charge for this wholesome beverage is little if any more than that made for inferior goods. $1.00 buys a case of pint bottles, with no additional cost for delivery any where in the city.

TRY OUR MALT TONIC. IT BUILDS YOU UP.

RHINELANDER BREWING CO.

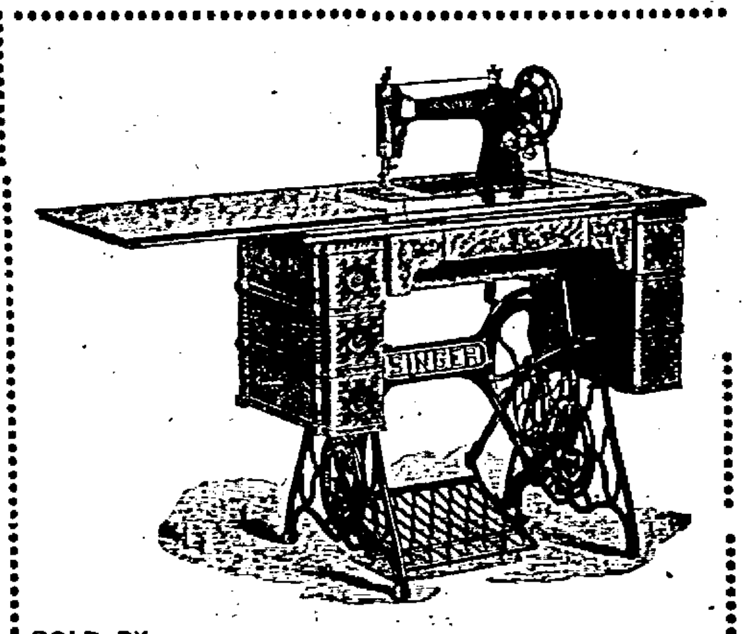

SOLD BY

GEO. C. JEWELL

DEALER IN

Popular Makes of Pianos and Organs, Columbia Phonographs and Records

20 YEARS IN BUSINESS

RHINELANDER, WIS.

The Bon Ton Parlors

AND CANDY KITCHEN.

Fresh and Pure Home-Made Candy

The Best Ice Cream In the City

COME ONCE AND YOU WILL COME AGAIN

We are now located in Anderlee's Building next to Zander's Clothing Store

ROUMAN & ROUMAN

22 Brown Street
Telephone 221-2

Painting, Papering, and Interior Decorations

That's my line, and anything and everything in that line is executed with neatness and dispatch. Try us for quick service.

BARGAINS IN WALL PAPER.

We still have a few very pretty patterns left from our fire sale. Call in and see them.

G. P. ALEXANDER

TELEPHONE 261 2

School has Commenced for 1905

School Supplies of all Kinds, Books, Stationery, Etc., at

BRONSON, THE STATIONER.

Don't You Forget

To go and see Albert Broulette about that job of

Painting and Papering

He puts it on to stay and fully guarantees his work

PHONE, 44-2

Albert Broulette, - 633 Keenan Street

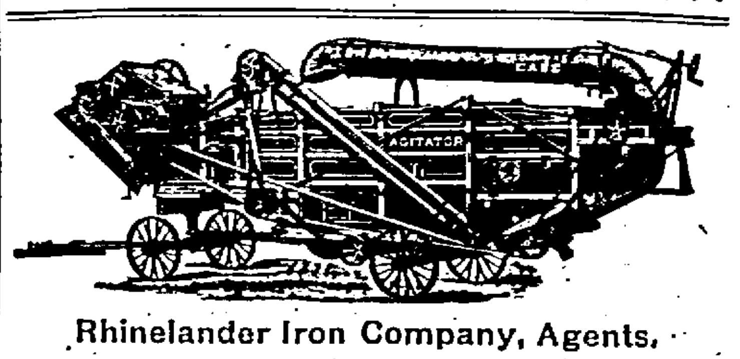

Rhinelander Iron Company, Agents.

THE CITY IN BRIEF

Mrs. John Barnes and children departed for Madison last Friday.

Mrs. M. Sutliff entertained last Friday afternoon in honor of Mrs. Seeley.

Mrs. R. C. Dayton entertained Saturday in honor of Mr. Dayton's mother.

Miss Winnie Joslyn has returned home from a visit at Oshkosh and Milwaukee.

Mrs. Max Ostrowski has returned from her visit at Milwaukee and Stevens Point.

Mrs. Seymour Phelps of Jackson, Alabama, is a guest at the home of Mrs. James Trumble.

The J. H. Queal Co. is building an addition to their ware house west of the Northwestern tracks.

Harry Slossen has been spending the past week visiting friends in Wausau and Stevens Point.

Mrs. A. D. Daniels accompanied her son Joseph to Spring Green last week where Joseph will enter school.

M. M. Hunter was at Sayner the latter part of last week on business for the Wis. Blue Grass Land Co.

Mr. and Mrs. Jack Harrigan of Manitowish were in the city Thursday attending the Oneida county fair.

Wm. Garot, a pharmacist from Green Bay has accepted a position at Kretlow's pharmacy as prescription clerk.

C. E. Klumb of Jackson, Mississippi, arrived in the city Thursday for a several days visit with Rhinelander friends.

The Misses Quinlan have removed their millinery stock to the building formerly occupied by Mrs. Viola Edwards.

E. Sterling of Washington D. C., who has been visiting at the home of Dr. and Mrs. Daniels, returned to Washington last week.

Miss Anna Adams left Thursday for Carthage, Mo., going there to accept the principalship of a department in a business college.

Roy White has accepted the position of car clerk at the Soo depot recently vacated by Will Ashton, Jr., who has returned to the West.

A pleasure party composed of E. G. Squiers, Lige Sturdevant, Vane Jones and C. H. Hodgson spent Sunday at Tomahawk Lake.

Carpenters and painters have been repairing the steeple on the Methodist Episcopal church which was struck by lightning last June.

Work on the streets is progressing nicely. Contractor McGrath has a large force of men on the work and hopes to have it completed this fall.

John Duce, a former Rhinelander young man prominent in athletic circles here a few years ago, spent the week in the city the guest of old friends.

Julius Klement, aged 97 years, died Monday at his home in Arbor Vitae. He was one of Northern Wisconsin's pioneer residents and had been blind ten years.

George W. Smith has resigned his office as postmaster at Somo. Congressman Brown is now looking around for a suitable candidate to fill the vacancy.

Fred Zinn was a business visitor at Rhinelander the fore part of the week. Mr. Zinn has taken a contract to paint the new German Lutheran church in that city.—Tomahawk.

A wagon road is being built through the woods between Lake Thompson and Lake George, a distance of about one mile. The road will be a great convenience to camping parties.

Frank Rogers, who has been suffering from an attack of appendicitis, was removed from his home 730 Wabash street to St. Mary's hospital last Friday where he will undergo an operation.

Good advice to women. If you want a beautiful complexion, clear skin, bright eyes, red lips, good health, take Hollister's Rocky Mountain Tea. There is nothing like it. 35 cents, Tea or Tablets.
J. J. Beardon.

H. H. Ober, agent of the Chicago Milwaukee and St. Paul Railway at Minocqua, came down Thursday to attend the fair and visit friends at the county seat. Mrs. Ober, who has been visiting Miss Nellie Didier returned home with Mr. Ober Friday morning.

Among the many new residences now in course of construction, perhaps the neatest and most attractive is that of Frank Bibby which is being erected by him on Lincoln street. The building is being constructed of cement building blocks and is to be modern in every detail.

Harry E. Slerwright, employed as bookkeeper by Mason-Donalson Lumber Co. at Rhinelander, is spending a short vacation at his home here. While in the city he employed Miss Alice Packard to act as stenographer for his firm, and she will begin her duties on Sept. 11.—Stevens Point Journal.

J. M. Baker was at North Crandon on business Monday.

FOR SALE:—Three horses. Inquire of Robbins Lumber Company.

Mrs. Abbie Donaldson entertained the members of St. Augustine's Guild at her home on King street yesterday.

P. F. Seibel and A. W. Crusoe have nice new signs that are very neat. The lettering was done by Alexander.

John Hess and wife were among those who went from here Monday to attend the state fair at Milwaukee.

Dennis Herreen and John Bernstein returned last week Wednesday from an extended visit at their old home in Sweden.

Threshing is on in full swing in this vicinity now. Very good yields of oats and other small grains are reported.

Rev. A. F. Hersfeldt, pastor of the Lutheran church at Eagle River, and Chas. Zimpleman also of Eagle River were here last week.

LOST:—Watch charm with Elks, K. P. and Odd Fellow's emblems on. Finder return to Carling & Jewett and receive reward.

Contractor McGrath has his stone crusher working full blast now, and the work of macademizing Thayer street is progressing nicely.

Will Monk, until recently employed at the Soo round house, left Sunday evening for Gladstone to assume a position as locomotive fireman.

Ex-Mayor and Mrs. Anderle and daughter, leave Saturday for a week's visit with Mr. Anderle's parents, Mr. and Mrs. I. Anderle at New Lisbon.

Rev. DeJung left Wednesday morning to attend the Wisconsin River Valley conference at McMillian, Wis. He expects to return home Friday evening.

Mrs. N. C. Boardman of Cylon, Wis., arrived in the city Saturday for a ten days visit with her son, A. P. Rickmire, and daughter, Mrs. C. F. Emden.

Lowell & Bross have the contract for the plumbing and heating in Dr. Daniels' new residence now being erected. The building will be heated by hot water.

Mrs. Peter La Chance and son of State Line spent Sunday here with her husband who is undergoing treatment with Dr. Garner for a badly lacerated hand.

LOST:—White corset jacket between Lake Julia and city while driving Sunday afternoon Sept. 10th. Finder leave same at New North office.
W. C. SCHOEN.

E. G. Squiers and B. F. Jillson, who recently bought a large tract of land and residence property at Monico, disposed of one of their store buildings last week to Mr. Kelly.

Rev. and Mrs. D. C. Savage and daughter of Dunbar were visiting friends in the city the fore part of the week. Mr. Savage was pastor of the M. E. Church in this city some years ago.

Rheumatism, gout, backache, acid poison, are results of kidney trouble. Hollister's Rocky Mountain Tea goes directly to the seat of the disease and cures when all else fails. 35 cents.
J. J. Beardon.

Julius Dickman came down from State Line Sunday evening suffering with a broken arm which he had sustained in a runaway accident there Sunday afternoon. The fracture was attended to by Dr. Garner.

There are a great many beautiful lawns in this city, but the prettiest one the editor has seen to date is at Richard Reed's, corner of King street and Oneida avenue. It is perfectly level, has a fine catch of grass and is well kept.

Examinations will be held at the city council rooms Saturday afternoon, Sept. 17, for a new rural mail carrier. Application blanks and full particulars regarding the examination may be obtained by calling on Postmaster Parker.

Saturday afternoon the large steam roller used in preparing the crushed stone on Thayer street, slipped on the grade and partially tipped over onto its side. No damage was done beyond that caused in delaying work while the big machine was being righted.

The board of review of the town of Pelican is in session at the town hall on Anderson street this week. So far we have not heard of any of the residents of that section of the county complaining that their property was in any way assessed too low.

Andrew Bergh of Chicago has been employed to do the watch repairing at Carling & Jewett's. Mr. Bergh is a watch maker of considerable experience, having learned his trade in the old country and put in 21 years in this country as a watch maker in the Elgin and Rockford watch factories.

The ladies of the Methodist Episcopal church will hold a Christmas Bazaar on Nov. 30 and Dec. 1 and 2. Many beautiful novelties will be for sale and no article will be sold or bargained for prior to the opening of the sale on Nov. 30. A rummage sale will be held in connection with the Bazaar. Wait for bargains.

Make Your Grocer Give You Guaranteed

Cream of Tartar Baking Powder

Alum Baking Powders interfere with digestion and are unhealthful.

Avoid the alum.

Mrs. Maurice Straub returned from a visit at New London Friday.

D. Kirk and son L. C. Kirk were state fair visitors the fore part of the week.

The first frost of the season was noticed yesterday morning and it was a heavy frost.

Olof Rosen has returned from a trip to the twin cities, Duluth, Superior and Two Harbors, Mich.

Miss Della White left yesterday morning for Appleton to resume her course at Lawrence University.

WANTED:—Girl for general housework. Good wages.
MRS. W. W. CARR.

LOST:—Pair of gold-bowed spectacles and case. Finder please return to MRS. LIGGE, 909 Margaret St. e21

Alderman C. F. Barnes' new residence is going up rapidly. Mr. Barnes expects to have it ready for occupancy by Nov. 1st.

A chimney fire at the American laundry Tuesday morning called out both fire departments. No damage was reported.

A marriage license was issued Tuesday by County Clerk Carr to Frances Harrington and Letta Griffin, both of Rhinelander.

Messrs. A. W. Brown, C. H. Donaldson, C. S. McIndoe and W. T. Stevens left last night for Milwaukee to visit the state fair.

F. S. Robbins will leave this week for a few days visit to his ranch in Idaho, and to look after his lumber interests in that state.

Rev. and Mrs. A. G. Wilson held a reception Tuesday evening in honor of their son Royal G. Wilson, who will return to New York this week.

Robert Bramel of Wausau, a nephew of G. P. Alexander, arrived in the city last week and is at work with Mr. Alexander learning the business.

Deck Cole and family left Monday evening for a week's visit with relatives at Marshal. Theo will also take in the state fair at Milwaukee before they return.

Game-warden James Oberholtzer, of Eagle River, was in the city Tuesday. He left here the same day in company with Game-warden Marten Berg for Iron county.

August Austria, the widely known pioneer Woodruff-Arbor Vitae stage manager was in town Monday enroute to Milwaukee and Watertown on a much needed vacation.

FOUND:—On Arbutus street, a light colored jacket lined with white satin. Owner can have same by proving property and paying for this notice.
LOUIS SATERSTROM, 634 Arbutus St.

Are you lacking in strength and vigor? Are you weak? Are you in pain? Do you feel run down? The blessing of health and strength come to all who use Hollister's Rocky Mountain Tea. 35 cents.
J. J. Beardon.

Archdeacon Babcock upon his return from the West immediately commenced work visiting the churches in his district. He was at Eagle River, Tuesday; Hackley, Wednesday; Crandon, Thursday, and he preaches at Antigo next Sunday morning.

Mrs. I. Battin and son left Saturday for Rice Lake where they will reside in future. Mr. and Mrs. Battin came to Rhinelander some weeks ago with the intention of locating here, but owing to the lack of suitable houses here have decided to go to Rice Lake. Mr. Battin represents the Standard Oil Co. in Northern Wisconsin.

Judge L. J. Billings returned from Tomahawk Lake the latter part of last week. While there the Judge sold a tract of his land on the lake to Mr. Dessert, president of the Dessert Lumber Company. Mr. Dessert will commence the erection of a summer home on the property next spring.

This is the season for hunting small game, and many of our local nimrods have been out after the fleet winged duck and partridge. Some very nice strings of ducks have been brought in, but the birds are reported to be rather scarce. Partridge are almost impossible to get owing to the dense foliage on the trees and underbrush.

PERSONAL MENTION

—A. P. Rickmire made a business trip to Duluth Friday.

—A. Hainer transacted business at Three Lakes Saturday.

—D. L. Jenkins of Minocqua was here on business Tuesday.

—Henry Oberholtzer of Eagle River took in the fair last week.

—Miss Hattie Boehm of Shawano is visiting Mrs. M. Zimmerman.

—W. C. Schoen of Monico visited with friends in the city Sunday.

—Miss Orma Chatterton has returned from her visit at Oshkosh.

—Ole Swenson of Woodruff was in the city on business last Friday.

—A. O. Jenne of Woodboro was in the city the fore part of the week.

—A. J. Bolger of Minocqua greeted friends at the county seat Friday.

—Rev. Mr. Coxe of Antigo is visiting Archdeacon Babcock this week.

—Hugh Brown of Arbor Vitae was a business caller in town Saturday.

—Miss Gene Shea of Ashland is a visitor at the home of A. W. Shelton.

—Mrs. T. B. McIndoe has returned from a visit at St. Paul and Minneapolis.

—Ernest Meikeljohn left last Thursday for a few days visit at Green Bay.

—Wm. Dunn and wife of Jeffris visited relatives in the city part of last week.

—Will Abbot of Wausau was in the city for an over Sunday visit with relatives.

—A. Hanson and Frank Federer of Three Lakes were here on business last Thursday.

—T. S. Shepard transacted business before the U. S. Land Office in Wausau last week.

—Mrs. Chas. Lau of Star Lake is visiting at the home of her parents, Mr. and Mrs. D. H. Vaughn.

—Mrs. C. M. Park returned from a visit at the Lewis & Clark Exposition, Portland, last Sunday.

—Mrs. B. F. Jillson of Monico was in the city last week attending the fair and visiting with friends.

—Mr. and Mrs. H. H. Seymour and son of Tomah are visitors at the home of F. R. Tripp, Robbins.

—J. B. Jenson of Neenah, representing the Menasha Wooden Ware Co., was in the city Tuesday.

—Mrs. E. P. Langeson and daughter of New London are visiting with the family of her sister, Mrs. S. Walters.

—Miss Vernie Crego who has been visiting her sister, Mrs. H. A. Johnston, departed for Merrill Saturday morning.

—Mrs. A. Bampton of Dancy, who has been visiting at the home of her brother, H. P. Morrill, returned to her home Friday.

—Mrs. Norman Jones, Mrs. John Gunning and Miss Jessie Pierce of Friendship are guests at the home of Mr. and Mrs. Isaac Tuttle.

—Mrs. A. Peterson, who has been the guest of her daughter, Mrs. O. A. Kolden, left Monday morning for her home in Nelsonville. She will spend a few days with Tomahawk relatives.

Notice For Bids.

Bids will be received by the Board of Public Works of the City of Rhinelander for 600 cords of green sound 4ft tamarack wood to be delivered at the city pumping station on or before the 1st day of March, 1906. Bids may be filed with the City Clerk on or before the 2nd day of October, 1905, at 12 o'clock noon. The Board reserves the right to reject any and all bids.
By order of the Board of Public Works.
GEST. SWEDBURG, City Clerk.
Dated Sept. 11, 1905.

POTATOES ROTTING

Indications point to the fact that the potato crop will not be a great success in this section. Farmers are complaining that the potatoes are rotting quite badly in the ground and present outlook points toward the theory that the rot will continue, and if a dry time does not come soon, it will mean a big loss on this crop. Considerable grain is spoiling from not being dried out, and has commenced to sprout in the shock. Those who have threshed are obliged to spread it out and continue to shovel it over and over to prevent heating.—New London Press.

MAY LOSE TWO PAPER MILLS.

The Kimberly & Clark company has practically decided to close the Vulcan and Tioga mills at Appleton as soon as its plans in regard to the new Kimberly mill are consummated. It is planned that two more machines be installed in the new mill at Kimberly and when that is done the two mills at Appleton no doubt will cease to exist as paper mills. The Kimberly plant has been erected with a view to accommodate two more paper machines that are now in operation and eventually the company will install the additional equipment. The two mills here have been operated for about a quarter of a century with the same equipment.

WANTED.—2000 cords of boulders, or quarried granite trap rock, broken to suitable size for stone crusher. Price $4.00 per cord delivered at crusher in the city of Rhinelander, we pay the weighing.
a10-s14. T. J. MCGRATH, Contractor.

Crochet work of any kind done, especially shawls and angora hoods or bonnets for children of all ages. Work done well and cheap.
MRS. CAPT. HOSKING, Salvation Army

A friend of the Home—
A foe of the Trust

Calumet Baking Powder

Moderate in price—Makes purest food.

O. A. KOLDEN & PROP.

THE PEOPLE'S SAVINGS STORE

Ladies' Cloaks and Furs

Women of careful taste in dress and who are inclined to economy will be interested in our splendid line of Fall Cloaks and Fur Garments now fresh from the leading producers.

Warm Clothes For Cold Weather!

Fall and Winter Suits at Favorable Prices.

THE advance agent of cold weather has been here and per his advice we have now on tap a fulland complete line of Warm Goods for Colder Weather and are selling them rapidly. You can't miss a deal on anything we are offering you in this line.

A Good Warm Line of Underwear at From $1.00 to $5.00 a Suit.

Boys' at from 25c to 75c per Piece.

Sheep Lined and Corduroy Coats

Canvass Coats of different weights and lengths.

The new Corduroy-Leather reversible Coats

The new Malone Mackinaw Coats for Men and Boys

New goods bought and priced before the advance. We solicit your approval on same at

GARY & DANIELSON'S

NORTHERN PACIFIC

Very Low Rates To Portland, Ore.

Lewis and Clark Exposition excursion tickets will remain on sale daily via Northern Pacific Railway until September 30, with final limit of Nov. 30, 1905. Liberal stop-over privileges, fast through passenger service, luxurious trains and low side trip rates for those who wish to break the journey.

$45.00

For the Round Trip From St. Paul, via

Northern Pacific Railway.

"Every Mile an Education."

Through Burlington-Northern Pacific service from St. Louis to Puget Sound via Billings, Mont., Write for special literature and information to A. M. Cleland, General Passenger Agent, St. Paul, or to J. T. McKenney, D. P. A, Fourth and Broadway Streets, St. Paul, Minn.

Now is the Time

To Think of

SCHOOL SUPPLIES

Kretlow's Pharmacy

Carries a complete line of everything that is needed in the school room.

Fancy Stationery
Drugs, Medicines
Perfumes and
Toilet Articles

F. E. Kretlow, Proprietor

Axel Lindegren

CLOTHES CLEANED, DYED AND REPAIRED.
Metals and Rubbers Bought and Sold

The Indian Trading Post

Souvenir Postal Cards Indian Made Birchbark Novelties, Etc.

New Location - 17 Davenport

Telephone 16-3

RHINELANDER, WIS

Cause of Insomnia.

Indigestion nearly always disturbs the sleep more or less and is often the cause of insomnia. Many cases have been permanently cured by Chamberlain's Stomach and Liver Tablets. For sale by Anderle & Hinman.

FOR RENT:—An eight room house. Inquire of E. G. SQUIER.

DRUGS AND MEDICINES!

The newest and best medicinal supplies in the city. Prescriptions accurately compounded by competent pharmacists.

A FULL LINE OF
Perfumes, Stationery and Toilet Articles
School Supplies, Etc. Etc.

ANDERLE & HINMAN

NEW NORTH.

PARK & Co., Publishers.

RHINELANDER, - WISCONSIN

SUMMARY OF A WEEK'S EVENTS

MOST IMPORTANT HAPPENINGS AT HOME TOLD IN CONDENSED FORM.

LATE FOREIGN DISPATCHES

Interesting Items of News Gathered from All Parts of the Globe and Outlined in the Briefest Manner Possible.

PEACE CONFERENCE.

The treaty of peace between Russia and Japan was signed by the representatives of the two empires at 3:47 p. m., September 5. On the instant of the consummation of the great historical act a salute was fired at the United States navy yard on Kittery Point.

Russia and Japan agreed to exchange ratification of the peace treaty at Washington.

According to the terms of an alleged secret agreement between the czar and mikado Japan will receive an indemnity of $500,000,000 from the Slav ruler's private funds.

M. de Witte was the guest of honor at a dinner given by Col. Harvey in New York. The czar's plenipotentiary paid President Roosevelt a glowing tribute.

The Tokio municipality has passed a resolution denouncing the peace terms and favoring the abandonment of the peace treaty.

DISTURBANCES IN TOKIO.

Tokio mobs attacked E. H. Harriman and other Americans. The crowds destroyed Christian churches, police stations and the home of a cabinet minister. The people demand the rejection of peace treaty. Martial law has been declared and national troops called into service to quell the disorder.

Two persons were killed and 500 injured in fierce rioting in the streets of Tokio, resulting from popular anger over what is considered an ignominious peace. Signs of revolution, however, are lacking.

Japanese mobs became active in Kobe, where a statue of Marquis Ito was dragged through the streets. Order has been restored in Tokio under martial law. The government decided to yield to popular clamor and publish the peace terms.

The Japanese cabinet, in which Komura is foreign minister, and which ordered the concession to Russia, may be thrown out, and the envoy may be censured by the diet.

YELLOW FEVER SITUATION.

The New Orleans yellow fever record to date is: Deaths, 258; total cases, 2,142.

Yellow fever, though checked in New Orleans, spreads with alarming rapidity in the northern part of Louisiana.

Yellow fever is spreading steadily along the gulf coast.

A physician of standing in New Orleans was arrested for failure to report two yellow fever cases.

Improved sanitation in all the built-up parts of the city will be the inevitable result of the yellow fever invasion of New Orleans.

MISCELLANEOUS.

An earthquake in southern Italy killed 400 persons, injured 600, left thousands homeless and destitute, destroyed 25 towns and caused an enormous property loss.

The emperor of China has extended to President Roosevelt his congratulations upon the success of the president's efforts to establish peace between Russia and Japan and "to promote the welfare of mankind."

Tartars massacred 1,500 Armenians at Baku. Russian troops were surrounced after a day's fighting, in which they killed or wounded 1,000. The oil industry is wiped out.

The Russian army in Manchuria is still without official orders from St. Petersburg to cease its warlike activities, and the situation is intense. The soldiers are waiting for an armistice to be declared.

President Roosevelt by telegraph took summary action in the case of Frank W. Palmer, public printer, and head of the government printing office at Washington, by removing him from office. Oscar J. Ricketts has been placed in barge temporarily.

Gov. McLane, of New Hampshire, formally announced a gift to the state by the Japanese plenipotentiaries of $10,000, to be divided among the charities of New Hampshire.

Corporal James Tanner was elected commander-in-chief of the Grand Army of the Republic by the national encampment. Minneapolis was chosen as national encampment city in 1906.

John Mitchell, president of the United Mineworkers, announces he will back the miners in their demand for an eight-hour day and recognition of the union.

Brig. Gen. Carter advises more severe punishment for deserters from the army.

The commercial men of north China expect to see southern Manchuria opened to foreign trade.

Fred Walker, of Pontiac, Mich., arrested and imprisoned in Panama, went mad in a dungeon. He was released by order of the United States government.

Tartars overrun southeastern Caucasus, burning, pillaging and murdering. Thousands of peasants are homeless.

The steamer Iosco, with 19 men aboard, is among the victims of the recent storm on Lake Superior, making 49 drownings known.

Fifty persons were slain and as many wounded in the rioting at Baku. Corpses strew the streets and incendiary fires cause heavy loss.

The national convention of post office clerks opened at Cedar Rapids, Ia., with 200 delegates, representing a membership of 97,000, present.

The Chinese government has ordered 10,000 tons of flour from Minneapolis milling interests.

Maj. Charles R. Miller, of Cleveland, O., has been elected commander-in-chief of the United Spanish War Veterans.

Alonzo A. Lewis, an employe in an undertaking establishment in Indianapolis, Ind., killed his divorced wife, Nora Lewis, with a razor, and then slashed his own throat, inflicting wounds which will prove fatal.

Rear Admiral Charles J. Barclay has been placed on the retired list of the navy on account of age, after 46 years continuous service.

Judge William L. Penfield has been designated by the president to make an investigation of the trade relations between the countries of South America and those of Europe with a view to improving American commerce with the countries lying to the south of the United States.

While trying to save his two children, a son and a daughter, both under ten years of age, from a fire in a crowded tenement building in New York, Antonio Coletto and both children were suffocated by smoke.

Morris Busch, contractor, and Robert Charlton, inspector at the Schuylkill arsenal, are to be tried for conspiracy to defraud the government.

The drivers' strike is not allowed to interfere with transportation of mail through the streets of New York.

An explosion of eight gallons of gasoline in Newark, N. J., killed one woman, injured five persons and caused big damage.

Two boys, six and seven years old, robbed a bank at Youngstown, O., of $700, but were caught after a chase.

Solicitor Penfield's trip to South America, under direction of the president, is expected to result in a better trade understanding with Brazil.

The printers' strike now on in Chicago is to be extended at once to all other western cities where the eight-hour day is not already in operation.

Mayor Jones, of Covington, Ind., promptly shot and killed a man who threatened to take his life.

Unfairness in the awarding of a $50,000,000 concession by Chairman Shonts of the Panama canal commission is charged by unsuccessful bidders.

The treasurer of the New York Life Insurance company admitted to the legislative inquisitors that securities worth more than $6,000,000, assets of the concern, were hidden from the public, and made over to a trust company by office boys, who signed notes.

Charles F. Pfister, of Milwaukee, began a $500,000 suit for conspiracy against District Attorney McGovern, his assistants and the editor and directors of the Milwaukee Free Press, declaring they plotted to ruin him because of political differences.

A home for the members of the Letter Carriers' association who may become victims of the great white plague will be erected at Colorado Springs, Col.

Dr. Menefee, Sr., one of the best-known physicians in the south, died at his home in Nashville, Tenn., aged 82. Dr. Menefee was a member of the confederate congress.

Steve Davis, a negro, 20 years old, was burned at the stake near Howard, Tex., for assaulting Mrs. S. H. Norris. He was identified and confessed.

Two persons were killed, one of them a girl 16 years old, when a building at Grand and Mott streets, New York, collapsed.

Two dead and probably 50 injured is the record of a train collision on the Western New York and Pennsylvania division of the Pennsylvania lines, near Newcastle, Pa.

Fire of unknown origin destroyed the business portion of Forest Port, N. Y., entailing a loss of about $500,000.

The total amount disbursed for pensions for the fiscal year ending June 30 last was $141,142,861.

Roberts Jacobs, 21 years old, of Detroit, Mich., was drowned while canoeing in the Ossipee river, at Cedar Falls, Me. He was paddling down stream, when the swift current swept the canoe over a high waterfall.

A fast passenger train on the Pennsylvania railroad ran into a party of five workingmen at Homewood, Pa. Three men were killed and the other two were seriously injured.

The total amount of money paid for pensions since the foundation of the government is $3,220,860,022, and of this amount $3,114,395,495 has been paid on account of the civil war.

Morocco yielded to French demands by apologizing and paying an indemnity for the arrest of an Algerian citizen, thus adjusting a threatening situation.

The Swedish and Norwegian dissolution commissioners adjourned to receive further instructions from their respective governments.

The Berlin police admit inability to keep cholera from the city and urge citizens to adopt sanitary measures.

An official of the Mutual Life Insurance company admitted that officers of the company have made personal profits by bond transactions of the concern, at the legislative investigation in New York.

Many college men attended the dedication of a monument to the founders of Granville, O.

Marshall Field and Mrs. Arthur Caton, of Chicago, were united in marriage at St. Margaret's church, Westminster, London. Canon Herbert Hensley-Henson, of St. Paul's cathedral, assisted by Rev. Samuel Kirshbaum, of St. Margaret's, performed the ceremony.

The opening day of the grand circuit races at Charter Oak park, Hartford, Conn., ended in a tragedy, when Sadie Mac, the Canadian trotting queen, dropped dead in the fourth heat of the $10,000 Charter Oak trot. A veterinary surgeon attributed death to a broken blood vessel.

The president disappointed show-loving Washington by forbidding a public reception on his home coming. Plans were under way for a parade.

Residents of the summer colony at Newport, R. I., revolted against camera fiends, curious persons and heavy taxes, and started a movement to separate their district from the remainder of the city.

Miss Marie Hamill, a Philadelphia society leader, and her fiance, Neil Wolf, were killed in an auto wreck.

Cholera plague continues to grow in Prussia, many new cases and deaths being reported.

Reports at the national G. A. R. encampment in Denver show the order's ranks to be steadily growing smaller.

China will demand large indemnity from Russia and Japan for damages sustained during the war.

Fifty-five branches of the National Association of Post Office Clerks bolted the convention at Cedar Rapids, Ia. The split is due to a charge that the smaller cities in the association were not getting a square deal.

The United Typothetae of America, in session at Niagara Falls, decided to fight the eight-hour day demanded by the typographical union. Open shops are to be the rule.

China paid J. Pierpont Morgan $2,000,000 as the first installment for an American railroad concession.

Los Angeles electors endorsed a scheme to turn the course of the river, bringing it 240 miles into the city.

A Paris official says that the Anglo-Japanese defensive alliance is greatly strengthened since the ending of the far east war.

Public Printer F. W. Palmer practically has been ousted from office. It was learned authoritatively that President Roosevelt had demanded Mr. Palmer's resignation, to take effect on the 15th inst.

The Vienna municipal council proposes to perpetuate the memory of President Roosevelt's success in restoring peace by renaming a street Theodore Roosevelt strasse.

At the state fair in St. Paul, Minn., Mr. and Mrs. F. H. Severthal, of Eau Claire, Wis., fell from the upper car of a Ferris wheel to the ground, a distance of nearly 100 feet. Mrs. Severthal was instantly killed and her husband was so badly injured that he may not live.

Dr. David E. Salmon, chief of the bureau of animal industry, department of agriculture, has tendered his resignation, and it has been accepted, to take effect on October 1.

A Russian imperial order has been issued dismissing Rear Admiral Nebagatoff and the captains of three warships which were surrendered to the Japanese in the battle of the Sea of Japan. All four officers are deprived of their rank.

Judge Reuben C. Lemmon, one of the most prominent members of the bench and bar of northern Ohio, died in Toledo, aged 80 years.

Brig. Gen. Thomas T. Crittenden, colonel of the Sixth Indiana during the war, died at East Gloucester, Mass.

In attempting to cross the tracks of the Pennsylvania railroad at Mount Union, Pa., Charles Madden and his six-year-old son were struck by an express train and instantly killed.

The shah of Persia, before leaving St. Petersburg, donated $2,500 for the relief of the Russian wounded.

Gen. Chaffee and staff, who are in France to witness the army maneuvers, were the recipients of high official honor.

Fifteen thousand veterans participated in the G. A. R. parade at Denver, though many of the old soldiers were exhausted and compelled to drop out of line before the end of the route.

The University of Pennsylvania has received from the estate of the late Prof. Maxwell Sommerville $60,000.

John D. Rockefeller entertained American press humorists at his summer home near Cleveland.

Earnings of the American Hide and Leather company are $200,000 larger than last year.

The federal authorities may be asked to take up the case of a Pontiac (Mich.) man imprisoned in a Panama dungeon.

Twenty soldiers were killed in the latest anti-Semitic riots at Kisheneff.

Three masked men held up a gambling room in New York, secured $8,200 from the till and escaped.

Francis Bowes Stevens, Jr., grandson of Commodore Stevens, committed suicide by shooting at Westbury, L. I.

Charles F. Pfister sued a Milwaukee newspaper for libel, growing out of embezzlement charges.

Tartars are in full control of the region about Baku, Caucasia. Entire villages were massacred. Soldiers used artillery, but were defeated. The oil industry is ruined. Fighting is increasing.

Officials of big life insurance companies testified before the New York legislative committee that the so-called mutualization is a myth. Presidents are paid salaries of $100,000 and minor officers from $75,000 down.

Cholera in the heart of Hamburg, far from the emigrant station, causes great alarm, and the area of infection in Germany widens.

Three hundred drivers of United States mail wagons struck at New York for higher wages and because they claim the losses have failed to keep agreement.

Chicago packers under indictment for an alleged conspiracy in restraint of trade have been given until September 18 to complete the preliminary pleas in their cases.

Four persons were killed and 21 injured in a rear-end collision at Brush, Col., on the Chicago, Burlington & Quincy railway, between a passenger and a freight train, both westbound.

The tug Shamrock was struck by the steamer Richardson off Mamaise Point, Lake Superior, and sank immediately. Capt. Charles Richardson and an engineer, name unknown, were drowned.

Crops are advancing rapidly on account of favorable weather conditions, according to a report made public by the weather bureau.

Guardians were appointed for George Wells, of Grundy Center, Ia., a millionaire landowner, on petition of his sister, who declared his mind is unsound.

The enrollment at the opening of the Chicago public schools broke all previous records, and the total may yet reach 200,000.

News of the signing of the peace treaty was received in St. Petersburg with apathy.

Abram M. Pence, one of the oldest and most prominent lawyers at the Chicago bar, died suddenly in Paris.

Labor day was generally observed in the usual manner throughout the country.

Heartbroken because of the violent death of her betrothed, Leona Kreutzinger, 19 years old, ended her life in Chicago.

The thirty-ninth annual encampment of the Grand Army of the Republic began in Denver, Col.

Millions of dollars invested in mines are affected by a fight on the validity of the mining lease law of Minnesota.

AN AWFUL BLAST KILLS THIRTY

BIG POWDER PLANT IN PENNSYLVANIA BLOWS UP.

TEN BUILDINGS IN ATOMS

Fragments of Human Flesh Strewn for Many Rods—Shock of Explosion Is Felt for a Score of Miles.

Fairchance, Pa., Sept. 11.—All ten buildings of the Rand powder plant were torn to atoms, and probably 32 men were killed, scores were injured, many seriously, thousands of lives were imperiled, and dozens of houses were overturned by a series of terrific explosions Saturday morning, which shook the country for 20 miles around. Of the 32 men who went to work at the mills in the morning, 19 are known to be dead. It is believed that all have perished. Thirteen have been identified. Many of them leave large families. The dismembered parts of the dead in many instances were burned. Identification of many was made by clothing alone. Many who were near the works at the time were badly hurt, and the death list hourly is growing. Scores of persons in the village within a radius of half a mile were fearfully wounded.

There were seven explosions in all. Every one of the ten buildings was totally demolished. Not a vestige of them remains. The first three were not as serious as the last four. Then the packing house, pressing room, and magazine blew up, followed by two cars of dynamite standing on a nearby railroad siding, which were set off by the concussion from the powder mill explosions. Two other cars remained intact, and it was with difficulty that they were moved to a place of safety. Fearing that they would blow up, the work of rescue was abandoned temporarily. The lives of more than a thousand men were imperiled. The debris that was strewn over the ten acres of ground where the plant was located took fire soon after the explosion and added its terrors to the disaster.

Flesh Strewn Everywhere.

Small pieces of bodies were picked up all over the place. These were not collected together, and many sections of human beings were thrown back into the debris where they were found. Almost a half mile mountainward from the plant an office oversleeve, wet with blood, was picked up. One little boy carried to his mother a single part of a man's hand. All day at short intervals searchers would bring in lifts of bodies or clothing. Some of these finds were carried in dishpans or damaged powder cans with which the ground is strewn for acres. The hole where the magazine exploded is about 15 feet deep, and 50 yards square. The earth, black and soggy, is thrown up in huge chunks, some of them weighing a hundred pounds.

Train Nearly Blown from Track.

A passenger train on the Baltimore & Ohio railroad, northbound from Morgantown to Connellsville, which was passing the works when the first explosion occurred was almost thrown from the track by the concussion, which broke all the windows and caused a panic among the passengers, several of whom were injured by flying glass. Opposite the powder works the tracks of the Pennsylvania and Baltimore & Ohio railroads have been blown up. For a mile around Fairchance buildings have been blown over and at Uniontown, Pa., seven miles from the explosion, hundreds of windows have been broken. A large skylight in the courthouse at Uniontown was smashed and there was a panic among the occupants to escape from the building. Damage was done at Connellsville, Mount Pleasant and Scotdale, and in hundreds of homes the dishes fell from the cupboards and pictures were thrown from the walls.

Twelve bodies removed from the ruins of the Rand powder works are: Homer Humphries, Clyde Woods, James Breakiron, George Lewellyn, William Lewellyn, Elmer Hughes, Fred Walterstraw, Fred Walterstraw, Jr., Charles Bartlett, Charles Elfritz, Frank Ryland and Walter Hughes.

It is hard to determine the cause of the explosion, and its origin may never be known. Nor is the point at which the first explosion occurred known certainly. It is supposed to have taken place, however, in the mixing mill, resulting from a spark caused by a workman striking a tool against a piece of metal.

While a statement of the probable loss cannot be secured from those directly interested in the plant, it is said a conservative estimate places that to the Rand company at several hundred thousand dollars. Aside from this there is the extensive losses to private houses and buildings in all surrounding towns.

Swedish Methodists Confer.

Lincoln, Neb., Sept. 11.—Swedish Methodists of the states of Nebraska, Iowa, Kansas and Colorado began a four days' conference here Saturday. Bishop Hamilton is presiding, and Carl Froman, of Iowa, was elected secretary; Carl J. Mellberg, of Nebraska, statistical secretary, and O. J. Swan treasurer.

Yellow Fever Record.

New Orleans, Sept. 11.—The yellow fever record up to 6 p. m. Sunday is as follows: New cases, 27; total cases, 2,259; deaths on Sunday, 7; total deaths, 261.

HAVOC IN THE CAUCASUS

AWFUL RESULT OF WEEK'S FIERCE FIGHTING.

Thousands of Lives Taken—Great Industries Paralyzed—Loss Put at $90,000,000.

London, Sept. 11.—Fierce fighting still continues at Baku, the very southernmost point of Russian land in Europe. Tartar and Armenian and soldier of the czar are in hourly conflict. More than 5,000 lives have been lost in the battles. The loss in property and business is estimated at $90,000,000. Incendiary fires have desolated a region miles in extent, and crowded with costly industrial plants. The working people are starving. Neither bread or water is obtainable. The governor of the Baku province has issued orders to shoot down mercilessly all incendiaries, whether Tartars or others. Spirit distilleries and silk weaving works have been destroyed in cities of the Caspian shore. Tiflis and other cities are filled with refugees from Baku and the Shusha district, and terror prevails wherever Tartar or Armenian appears. Hundreds of English residents have taken ship and sailed for northern ports, while many families of wealth have followed them.

Baku, the center of the richest oil region in Europe, will require a year of tranquility to rebuild the factories and refining establishments that have been destroyed within the last week. Meantime engines that have been handling the railroad business of the Caucasus will be compelled to use coal, and thousands of tons of Cardiff and American coal are in immediate demand. In the interest of so important an enterprise, so seriously injured, the imperial government will be asked to suspend the prohibitive tariff. There will be no attempt on the part of investors to rebuild their plants until peace is established. Some of them declare their intention to withdraw from the city unless they are permitted to provide their own guards for their works.

Tiflis, Sept. 11.—The governor of Baku reports that firing continued Saturday night and Sunday, though on a smaller scale, and that few were killed or wounded. The troops and police, he says, are still engaged in preventing incendiarism and pillaging. The director of the technological institute at Baku telegraphs saying: "We are starving and dying," and imploring the dispatch of necessities. The worst news comes from the Zangezurski district, where it is reported that many Armenian villages were wiped out and hundreds of persons killed. Help is slow in reaching there, owing to the distance from the military centers. The whole of the Tartar population has risen and has been joined by 4,000 armed Kurds from the Persian bank of the Alas river.

CAR FAMINE FEARED.

Indications That Railroads Will Not Be Able to Handle Fall and Winter Trade.

Chicago, Sept. 11.—Commercial interests fear a car famine worse than any in the history of the country. In the east it is already felt, and signs show that conditions are growing acute in Illinois and Iowa. This is the direct result of immense business prosperity. Since railroads have experienced only the first movement of grain, trade interests are wondering what will result when fall and winter trade is at its height. Interior houses complain to grain dealers that the roads are not furnishing enough cars to move their cereals. There has been no labor trouble to hinder free action in shipments and the weather has been propitious. This makes the situation all the more remarkable. Close of lake navigation will throw much business upon the railroads. Conditions promise to become much worse with the appearance of cold weather.

Tragedy in Maryland Town.

Frederick, Md., Sept. 11.—Because his 16-year-old sweetheart persisted in her refusal to marry him and had dismissed him, Lee Weddles, 17 years old, is dead by his own hand, the sweetheart, Nellie Eichelberger, is suffering from two pistol shot wounds that may prove fatal, and her friend and companion, Maud Davis, has a bullet wound through her arm.

Miller Given Post.

Washington, Sept. 11.—Announcement was made at the state department Saturday that J. Martin Miller, who was appointed consul at Aix-La-Chapelle, but who was refused an exequatur by the German government, has been appointed consul general to Auckland, New Zealand, and that Consul General Dillingham, at Auckland, had been appointed to the post at Aix-La-Chapelle.

Seek Refuge.

Tangiers, Sept. 11.—Samuel R. Gummere, the American minister, and a number of European inhabitants, have abandoned their residences in the suburbs and removed to the center of the town at the request of the Moroccan authorities, who said they were unable to guarantee their security owing to the disturbed condition of the surrounding districts.

Aeronauts Believed Dead.

London, Sept. 11.—Jacques Faure, a well-known French aeronaut, accompanied by Marquis de Villalonga, started in a balloon from the Crystal palace bound for Denmark on Thursday evening. Nothing has since been heard of them, and the gravest fears are now entertained that the aeronauts have been lost in the North sea.

Femine Intelligence.

"Do you believe men like women with intelligence?" asked the serious girl.

"Yes," answered Miss Cayenne, "provided they have enough of it to refrain from impressing the man with his ignorance."—Washington Star.

Sown by the Wind.

The wind is, perhaps, the most active disseminator of plant life over the globe. A region devastated by fire will, in the course of a few months, be restocked with many different kinds of plants.

Scotland's Deepest Lake.

In a survey of the Scottish lakes a depth of 1,017 feet was reached in Loch Moray. This proves to be the deepest lake in the United ingdom. Only seven deeper lakes are known in Europe, four being in Norway and three in Italy.

Only a Dream.

Dingus—You had a delightful dream last night? What was it about?

Shadbolt—I dreamed you were paying me all the money you had borrowed from me at various times.—Chicago Tribune.

WISCONSIN STATE NEWS.

Badly Hurt.

Racine.—By an explosion in the magnificent $150,000 Bull-Robinson stables Frank K. Bull, president of the J. I. Case Threshing Machine company, and one of the best known manufacturers of the country, was badly injured and nearly lost his life, an 1,800 pound automobile was wrecked, a turn-table in the garage room was blown to pieces and damage to the amount of perhaps $10,000 done to the building, nearly every window in the structure being shattered. The turn-table, weighing 1,000 pounds, and the automobile, with Mr. Bull in it, were blown to the ceiling, eight feet above.

War on Chiropractics.

La Crosse.—The state medical board begun a campaign designed to prevent the practice of medicine in Wisconsin by physicians of the chiropractics school by securing a warrant for the arrest of Dr. G. W. Johnson, of La Crosse. Johnson is charged with practicing without a license, the board refusing licenses to practitioners of his school. Johnson will be backed by all the members of his branch of the profession in an attempt to have the present medical law allowing the prosecution of chiropractics declared unconstitutional.

Lightning Strikes Capitol.

Madison.—During a fierce electrical storm that passed over this city, lightning struck the dome of the state capitol, Mayor Curtis' house, and a flagpole on the Marston block on Main street. No damage was done to the capitol building, as the huge iron dome acted as a splendid conductor of the electric fluid. The lightning followed the electric wiring at the Curtis home and set fire to several parts of the house, but did not do a great deal of damage.

Was Not Murdered.

Neenah.—Capt. Michael Garvey, of the Appleton police force and a relative of Mrs. Margaret Sexton, who was found dead in her home here, and who it was reported had been killed by a burglar, declares that she died of natural causes. Capt. Garvey found that she fell down a stairway and sustained injuries that resulted in her death a few hours later. The money and other valuables that were reported missing have been found.

The News Condensed.

Neenah.—August Arndt, while at work in the High Cliff stone quarries, was buried by a cave-in of 50 tons of rock.

Kenosha.—The annual reunion of the Old Settlers' club of Kenosha county was held at the club grounds at Paddock's lake. More than 7,000 people attended the reunion. The main address was made by Rev. Chester R. Montague, of Lake Mills.

Madison.—A. C. Titus, first assistant attorney general, has gone to Crandon, where he will represent the state at the inquest over the death of Mrs. Walsh, wife of the district attorney of Forest county. Mrs. Walsh came to her death by shooting, and the coroner's jury is not satisfied with the statements made by Attorney Walsh and a young woman regarding the tragedy.

Milwaukee.—Elmer Huffmire, roadmaster, and Charles Moulding, clerk to Superintendent Hastings of the Milwaukee road, were thrown from a railroad velocipede into the ditch and badly injured, the accident being caused by a small dog which ran in front of the velocipede.

Janesville.—W. W. Cargill, the La Crosse millionaire, and Bishop C. H. Fowler, of New York city, assisted in laying the corner stone of the new Cargill Memorial Methodist church here. Mr. Cargill contributed $10,000 toward the construction of this edifice.

La Crosse.—Former Turnkey J. M. Childers, of the La Crosse county jail, charged with assisting two United States prisoners to escape, waived examination and was bound over to the federal grand jury to meet at La Crosse on September 26.

Madison.—Acting Governor Davidson has appointed Charles Ross, of Cavour, Forest county, as a deputy game warden, bringing the total number of such officers up to 67. A dozen or so more will be appointed before the opening of the deer season on November 11.

Janesville.—Mrs. Mary Schumacher, aged 80, of Turtleville, fell, breaking her arm, and lay for 18 hours in a helpless condition until found by a neighbor.

Ashkaton.—Barns near here, owned by James McQueen and James Carroll, were struck by lightning and burned on Saturday, with a loss of $5,000.

Sheboygan.—The six-months-old daughter of Mr. and Mrs. Wilhelm Zoch died after 15 hours of agony caused by being put bodily into a tub of scalding water by her five-year-old sister, who was in charge of the baby during the mother's absence.

Marinette.—The Marinette girls have the correct way of replying to would-be mashers. One of them hit a masher who accosted her over the head with a stick of wood and knocked him senseless.

Fond du Lac.—Mrs. W. W. Lanson, of New Holstein, who was seriously injured in an automobile accident in the town of Fond du Lac, will sue the town for $5,000 damages.

Waukesha.—A. F. Warden, chairman of the democratic state central committee, resigned that office because of his removal to Oklahoma.

Chippewa Falls.—The front wall of the new opera house fell in and seriously injured James Wilkey, a stone mason of Eau Claire. Two others were slightly injured. Wilkey's skull was fractured and he was hurt about the body and legs.

Manawa.—Reinhold Rochhu fell from a scaffolding in a fit and was instantly killed.

La Crosse.—Ida Caroline Husse, 16 years old, is dead of lockjaw, due to stepping on a rusty nail.

Milwaukee.—The first semi-annual report of the Provident Loan society, which has been in organization for six months, shows that $22,000 was loaned to the poor.

Neenah.—Mrs. Michael Sexton, aged 70, was found dead in a pool of blood at the bottom of the stairs of her home. Her head was crushed and murder is suspected.

A NEW TOWN

That Offers Fine Inducements to Prospective Residents and Careful Investors.

An extension of fifteen miles is being built by the Great Northern railway from Ellendale, N. D., southeast and a new town will be established at the terminus of this extension.

This new town will be named Forbes, and will offer opportunities for business openings that will at once appeal to the investor. The nearest trading point to Forbes will be Ellendale, which is fifteen miles distant. It is expected to build here one of the very best towns opened up here this season. The soil about this new town is the very best to be found in the state, and good crops are assured, and the fact that it has a large territory to draw from will make it an exceptionally good trading point. In the selection of the location of this town care has been taken so as to make the town serve the largest community and the best country.

The town is located in the southeast corner of section 36, township 129, range 65, and the first sale of lots will be held at Ellendale, N. D., on September 19th, at 2 o'clock. A representative of the Dakota Development Co. will be on the ground Sept. 17th and 18th to show those who are interested the exact location of the lots.

It is expected that regular train service will begin about October 15th. Several elevators will be built at once to handle this season's crop. The present indications point to a big demand for business locations, and there will be excellent opportunities for one or more strictly first-class hotels, several large general merchandise stores, hardware stores, livery stables, and in fact every line of business.

Mr. D. N. Tallman, president of the Dakota Development Co., of Willmar, Minn., will be pleased to furnish any further information relative to the sale of these lots. Send to him for pamphlet "New Towns in North Dakota," giving detailed description of the opportunities in the new towns now being built on the new extensions of the Great Northern railway.

Will Extend.

Winnipeg, Man.—Howard Elliott, president of the Northern Pacific railway, arrived here on board a special train.

Elliott was accompanied by Horne, general manager; Dunn, general counsel; Cooper, land commissioner; Woodworth, traffic manager; W. H. Cammell, general manager of the Minnesota & International railroad, one of the proprietary lines of the Northern Pacific, and E. W. Backus, of Minneapolis.

"We go from Winnipeg to Fort Francis and returning here, when we will return south and inspect some of the company's lines in northern Minnesota," said Mr. Elliott.

"We intend to look over the water power situation at Fort Francis and Rainy River. Parties have been urging us to extend our line to that place, and we are now investigating advantages of such an extension. The company has not yet had any plans prepared for the extension, but an investigation of the project may be considered as the official significance of the present trip."

Minneapolis Gets It.

Denver.—Minneapolis will be the next meeting place of the national G. A. R. Other cities mentioned for the encampment have withdrawn from the contest, and Minneapolis is the conceded choice.

John R. King, commander-in-chief, decided for Minneapolis. In an interview he said no city in the country was better fitted to care for the veterans. The encampment of 1884 is remembered by the old soldiers as one of the most successful in G. A. R. history in very many respects.

Northwestern Notes.

Sioux Falls, S. D.—The Dakota Central railroad has imported fifty men from Iowa to assist in the construction of its extension.

Bemidji, Minn.—Slot machine robbers are reported to be operating here, and considerable sums have been stolen.

St. Paul, Minn.—The state board of control awarded to J. R. Nelson & Co., of Mankato, the contract for the construction of an additional story to the employes' dining hall at the St. Peter state hospital. The appropriation for the purpose is $5,000.

Sioux Falls, S. D.—At a meeting held here by rural mail carriers from all parts of eastern South Dakota, an organization to be known as the South Dakota Rural Letter Carriers' association was formed.

Grand Forks, N. D.—The sixteen birds constituting the flock which flew toward the northwest over the city were supposed by many to be storks, but a local hunter says that they were cranes.

Duluth, Minn.—Duluth is to have a new park, one that will be more picturesque than any now established, and which is largely due to the gift of land by C. A. Congdon.

St. Paul, Minn.—The State Drainage league will ask congress to drain 200,000 acres of land in the Indian reservations.

Fort Pierre, S. D.—Deputy Sheriff Moore has just turned into the county treasury $2,900, taxes on cattle belonging to Corbin Morse, the U cross outfit, and other Stanley county ranchmen, who have been dodging taxes for years.

Harvey, N. D.—George F. Forster, principal of schools, has been offered the deputy collectorship of customs at Sherwood, N. D., by N. E. Nelson, collector of the port of Pembina.

Minot, N. D.—Mrs. Frank Rogers, who lived on a farm twenty-five miles southeast of here, died while being driven by her husband to the Minot hospital. She passed away so quietly that her husband did not know when she died.

St. Paul, Minn.—South St. Paul's application for a $50,000 loan from the permanent school fund for the purpose of constructing a new school was disapproved by Assistant Attorney General George T. Simpson.

Deadwood, S. D.—Fourteen-year-old Clarence Lumsden has the making of a first-class detective. He was robbed of his watch while attending the circus the other day. Instead of bewailing his luck he recalled every incident of the day and finally decided that a certain man with whom he had been in conversation was the guilty person. He had seen the man but once. However he went directly to the grounds, identified him and demanded his watch, which was returned.

Custer, S. D.—R. H. Fitcher, one of the two survivors of the Blackhawk war, died at the home of his son here.

SENSATIONAL CAREER OF A REAL GIRL BANDIT

"QUEEN" OF A GANG WHICH OPERATED IN VERMONT—STORY OF THEIR CRIMES AND THEIR CAPTURE AFTER FIERCE BATTLE.

WHY LOVINA LANFEAR BECAME A ROBBER

Thought It "Couldn't Be Any Worse Than Working"—Evil Associates and Influences Work the Ruin of the Daughter of a Farm Hand.

Bennington, Vt.—Lovina Lanfear, a bandit queen at 18, is in the jail here. According to the officers, the girl is as desperate a character as ever roamed the hills of the Green Mountain state. The capture of the gang with which she was associated seems to bear out their assertion, for the girl and her pals were taken prisoners after a desperate battle, in which one man lost his life.

Lovina Lanfear is in the same cell in which Mrs. Mary Rogers awaited trial for the murder of her husband. Mrs. Rogers' case attracted world-wide attention because of the brutality of the crime of which she was found guilty. The Lanfear girl's case promises to become as famous on account of her youth and the peculiar circumstances surrounding her strange career.

A remarkable story is hers, one that makes the hearer pity her rather than blame the girl. Her face is pretty, but her life has left its marks upon her features, and the blue eyes that might have glanced with tenderness are now shifty and cruel, the mouth is set, and there are no roses in her cheeks, while her golden hair is tossed tawdrily over a frowning brow. She came to the jail in rags, but has been given good clothes, yet she wears them with none of that pride with which a woman usually wears finery. Lovina Lanfear, in short, is a good example of the degradation to which a young girl open to evil influences can sink.

The girl bandit is the daughter of a farmhand, her birthplace being in Dorset, a near-by hamlet in the hills. "Vinie," as she is called, was brought up in poverty and vice. Her mother was weak, simple and careless of her children's well being, while the father was a brute almost passing description.

Last September she was married to a young man named Martin Westcott, who amounted to little. The girl is the mother of a child cared for at present by "Vinie's" family.

Her married life was short, and when she and her husband tired of living together they simply separated. After she left Westcott the girl met Albert Ross, a member of the gang of bandits over which she soon ruled. In fact, he was the most desperate, and was the one to lose his life when the country officers and the gang met in battle.

Asked to tell her own story in her own way, she does so willingly, and with a freedom that in an innocent girl would be taken as naivete, but in her case can be called nothing but abandon.

"Certainly I'm guilty of being with the gang," she says, "though you couldn't call us bandits. We didn't do anything so horrible, and if we'd been let alone we'd have got away without causing any harm except taking what we needed when we could find it.

"Everybody around here knows me. I was born near Dorset, and went to the district school. I didn't care much for it, and used to stay away when I could. Father and mother care? Not they.

"I married Westcott, but we didn't get along, so we just quit.

"I didn't care, because he tried to make me stay in the house nights when he was away, and I didn't want to. I like to enjoy life. Well, when he told me to go away from him, I went. I stayed at home a little while, and then met a fellow named Albert Ross, who was clerking at the Putnam house in Bennington.

"We kept company, Al and I, and he worked at the hotel and over at the golf links at Manchester-in-the-Mountains. But finally we got tired of living around here, and thought we'd get out.

"The first night it was dark, and I got tired; so Al and I went into a barn to sleep till morning. We didn't know there was anyone in there, but we had hardly got inside when we heard our names called, and, looking up in the haymow, saw my cousin, Merritt Reed, and a friend named Dan Brockway.

"When Al and I saw the fellows we wanted to know what they were doing there, and Reed told me that he and Brockway had given up their jobs and were going to be burglars. They had just robbed a store at Dorset and two or three houses, and they showed us a diamond ring, a watch, some other rings and a whole lot of stuff they had stolen and were hiding in the barn.

"When I told them Al and I were going away they asked me why we didn't join them. They said it would be a good thing for a gang to have a woman along, as she could do jobs that they would be caught trying. They offered me an equal share of everything, and said they would make me the 'queen' of the gang.

"Al didn't like the idea, but I said: 'Come along. It can't be any worse than working.' So he agreed to join, too, and we slept till morning.

"Early in the morning we left the barn and started north. Reed was armed, I knew, for he had shown me two big pistols, one of which he gave me. I don't know about the others, except that Al had a knife that he said he could use in close quarters if we got caught at anything. We walked all day, laying plans as to what we should do, and that night slept in the woods, making our beds of pine boughs. We were hungry, so I raided a hen roost near by, and that, with some veal that Reed stole, made our supper.

"The next day we went on to Pawlet, and that night we cleaned out a farmer's hen roost and all his clothes lines. Again we slept in a barn, and next morning tramped on to Granville.

"Our plans were not quite ready for the big trick we were going to try, which was the robbery of a bank in Manchester. We were not armed enough, and we didn't know the arrangements, so we decided to stay in Granville for a little while. So we stopped at the hotel over night. But the next day we thought we'd better go back, as it was rumored that we were being watched, and we didn't want to get caught and jailed for the simple little things we had already done. Besides, there was a jewelry store at South Dorset, kept by a man named Abrams. I thought it would be easy to get in there, and besides getting some diamonds, take what pistols and ammunition we might need for bigger work.

"It was a dark night, and we didn't expect we'd have any trouble over the Abrams trick. It was arranged that the boys should stand guard while I got into the store and cleaned it out. So I was to take the pistol that Reed had given me and protect myself if they didn't warn me in case of anyone coming, or if I should run across anybody in the store. About nine o'clock that night we got near North Dorset, where the jewelry store was and were just going down the road toward it when a team drove over a bridge that we would have to cross over a little stream.

"We tried to get out of their way, for none of us thought the team was after us. But the men in the wagon had lanterns, and I saw that we were discovered. We had been followed. I yelled to the boys to run for their lives.

"I recognized some of the men in the wagon as they began to jump out, among them Constable A. C. Mason, of Pawlet, and a farmer named Black, near whose house we were overtaken.

"Merritt Reed ran first, and Ross right after him, but I didn't see where Brockway went. I wasn't going to run, thinking that the officers would follow the men and I could sneak away quietly. Besides, I wanted to see how Al Ross would come out of the scrape, and, if possible, help him. As soon as Constable Mason struck the ground he drew a revolver and commenced firing. Then I drew mine, intending to use it if they fired at me.

"But before I could get a chance to fire I felt arms about me, and Farmer Black had me pinioned. At the same time Reed, who was being followed by Constable Mason, turned and fired at him. I yelled for Al to help me, and he turned to come up the little hill down which he had run. As he did he must have got in line with Reed's revolver, for he suddenly threw up his hands and yelled: 'I'm killed!' Then he fell to the ground.

"Al's death made me wild. I fought and kicked to get free, and if I had I would have killed some one. But there was no one to kill, at that, for the constable's posse was a pack of cowards, and only one man besides Mason himself stood ground. That was Farmer Black, who caught me. The rest ran for dear life as soon as a shot was fired.

"Reed and Brockway got away during the excitement. Al was killed, though he gave the constable a good tussle right in front of me before he fell back dead. Then they carried his body to a little schoolhouse near by and took me to Farmer Black's for the night.

"They caught Brockway next day in the next town, but they haven't got Reed, and if I'd had any chance to get away they wouldn't have got me, either. Al has been buried in the pauper's graveyard at Pawlet. What they'll do with me I don't know. What do I care, anyway?"

Such is the story of Lovina Lanfear. Not highly romantic, as she tells it, but, from the very manner of its relation, a remarkable illustration of what a girl can become who is given her own way and allowed to run fast and free, even in so civilized a community as a New England state.

She will not be tried as a principal for the murder of Ross, for which Reed will be arraigned. The robbery charges against the gang will probably be prosecuted, though Lovina may be used only as a witness against the others.

Vanity.

Miss Frances Keller, of the Women's Municipal League of New York, illustrated admirably at a recent dinner party a point which she wished to make in reply to a man who had said "women are vainer than men." "Of course," Miss Keller answered, "I admit that women are vain and men are not. There are a thousand proofs that this is so. Why, the necktie of the handsomest man in the room is even now up the back of his collar." There were six men present and each of them put his hand gently behind his neck.—Philadelphia Ledger.

Concerning Fall Fashions

STREET COSTUMES.

THERE will be the fall suit whose details match, there will be the separate coat to wear with gowns generally. A feature, however, it seems safe to prophesy, of the season will be that my lady pay less and less attention to coat and jacket of the same material. Which makes for economy as well as variety. The three-piece suit is attractive to so many that it will remain in vogue for some time, and very good models are being shown; the skirts, for morning wear, short enough to escape the ground, the waist of silk, the coat and length one may choose very short and of Eton style, long and plain, or a basqued affair with fancy waistcoat. Skirts for dressy wear are long but without a train.

Broadcloth will continue in fashion, and this is a material, if the color is right, that can be worn at any hour of the day. Colors now, rather than stuffs, seem to determine whether or not a costume is dressy. A rose colored broadcloth answers the purpose for a gown on which many demands are to be made, although it has the drawback of being conspicuous, both wearer and observers the sooner growing weary of it. The broadcloths this season have a silken sheen, require little in the way of ornamentation, being in themselves so beautiful.

The perfectly plain circular skirt is the thing, but it takes an artist to make it hang well, set just right; when the perfection is attained there is nothing better to be had in the way of a skirt. The upper part of the costume bears the trimmings, we shall have again this year the rich, contrasting vest, the revers, the fancy collar.

Blue keeps its popularity, probably because it is the least trying of colors. Cream color is well liked, and the use of a bit of black or a bit of white about a dress. The question as to whether black will be fashionable in itself, is hard to answer; we are inclined to say that for street wear, no. For afternoon and evening affairs the spangled thin black waist will appear; and by the way, a waist of this kind is a valuable portion of almost any woman's wardrobe—but there are some that never, never should put on the somber black, it makes them look aged and sallow and forlorn. The many, however, can wear a fussed up sheer waist, and the plump, fair woman can do no better than invest in one with a detachable yoke; wear the blouse decollette for formal affairs, for evening at theaters or restaurant and for afternoon reception, make use of the high neck.

A very fetching costume lately came to my notice. It was of Alice blue cloth, fine and smooth, the skirt accordion pleated and hanging full and untrimmed. The jacket was short and tight fitting, the hat a turban trimmed with a dash of scarlet. Another blue costume I liked even better; one of bluette taffeta, with a waist of the same. Worn with this was along red-ingote of black taffeta, lapels embroidered in blue and the turn-over collar of blue taffeta. The hat matched the costume, being of black with trimming of blue plumes. It was quietly elegant, a reposeful ensemble.

White, once banished so completely from woman's neckwear, is in highest favor, and is immensely becoming. White Vs are introduced back and front of waist at the neck, white vests are worn, much white fluffiness. Black velvet is as becoming as the white fluffiness, and it also is well to the fore. By the way, we may mention here a beautiful cloak but so luxurious as not to be had by the average woman, not meant for daily needs. It is made of strips of velvet ribbon of richest black alternating with cream insertion; of three-quarters length and the sleeves voluminous, the wrap is of generous aspect.

The elbow sleeve is to abide during the cold weather, the tight lace cuff piecing it out. With the snow-white at throat and wrists even a "stuff" frock could be made attractive and dressy. Girdles probably will remain in style, though the tendency toward the princess mode may increase and push it into the background. Quite a few of the higher priced gown are shown on the princess model, fortunately one sees few cheap imitations; it is as difficult to make a satisfactory one-piece dress as a circular skirt that will hang well and keep from sagging. But some home dressmakers attain to the perfection once in a while.

Many Frills and Furbelows

CERTAIN of our gowns are very plain and tailory, others are adorned with numberless frills. House dresses are putting on ruffles, going in for airy nothingness; not a few street dresses are bedecked with yards and yards of gathered lace or batiste.

Over in London they are putting forth befrilled shirt-waists. As yet these waists have not appeared here, but it is safe to say they will land ere long.

A pretty turquois-blue silk waist that was designed for a card party, had in its make-up something less than five yards of silk and something over 20 yards of lace. It was fashioned with suspenders of the taffeta, and both waist and straps were edged with frills, very narrow and full. Turquoise buttons added to this blouse the metallic note which promises to be so much in evidence the coming season. A good authority makes declaration that metallic colors will be much worn, and metallic trimmings much in vogue. Mention is given of suits of gold color, of brass-colored cloth, of gowns of gun-metal gray and nickel gray, silks that come in a variety of metal colors, leather ornamented with glitter, buttons of enamel and metal, great stones inlet in stomacher-wide girdles and in narrower belts. We are to glitter as well as be be-ruffled.

It is doubtful if evening dress will depart so radically from day dress as to give up the sheath-like skirt for one flounced to the waist; but there are some signs that threaten this wide divergence. One should be slow though to go in for eccentricity, a marked change from what has obtained in the world of fashion. Be not too quick to lay the old aside is wise advice as well as the companion piece that one cling not too jealously to ancient forms. One thing we must look upon now as ancient form is the sloping shoulder, its day is over. Nevertheless a cape-sort of trimming, which certainly gives breadth to the shoulders, is coming in, promises to be worn on waists as well as wraps.

Over in Paris hats with very high crowns have blossomed forth, but knowing ones declare they will be a long time in winning acceptance here. The small and medium sized shapes will be worn the coming season, and doubtless the picture hat will adorn the head of many a girl that thinks she is of the Gibson class. We are repeatedly told that the picture hat is banished, and repeatedly we see it waving its wreathed plumes. We noticed one the other day that seemed to fit well with the costume and wearer thereof; the gown was a black and white striped silk, the effect really gray; girdle, ruche, and hat were black. It was Frenchy and becoming, relieved by a square neck and sleeve-puffs of creamy lace.

A HOUSE DRESS.

One pretty summery dress, the sort that will be worn yet when winter fires are burning, was made of shimmery light stuff, but the sash, which reached to the bottom of the dress, was black and black velvet ribbon adorned the big white hat. A dozen small ruffles close to the hem of the gown, made great fulness about the ankles, but the skirt fitted close about the hips. And this style we think will prevail over the flounced-to-the-top skirt. It certainly is more shapely, more generally becoming.

ELLEN OSMONDE.

Infallible Remedy.

"I am troubled with insomnia, doctor," said the haggard-looking man. "I can't sleep a wink at night."

"If you will follow my advice," replied the physician, "I'll guarantee a cure."

"What shall I do?" inquired he of the haggard look.

"Get a job as night watchman," answered the M. D. "Two dollars, please."—Cincinnati Examiner.

The Nutritive Value of Various Meats

Valuable Results of Experiments Conducted by Prof. Harry S. Grindley at the University of Illinois.

THE question of food is an all important one for all living beings. The struggle for existence among animals and primitive man consisted almost entirely in getting sufficient nourishment, and in avoiding enemies. In the civilized world to-day, we sometimes forget the extreme importance of this elementary biological fact. The questions of how to get food, of the most economical sort of food, of the food that gives the greatest nourishment, and of the best ways to prepare this food for eating, occupy unconsciously, a large part of the life of the men and women of to-day. For the poor, it is a matter of getting sufficient food, and for the rich it is often a matter of getting food that will digest. Both classes are confronted with the problem of obtaining sufficient nourishment; one class has not enough money to get the actual food they need, the other cannot find the food that will digest. With both classes it is a problem of partial starvation.

Until recently, science has paid little attention to this question of food. The whole thing has been more or less a matter of guess work and tradition. We once labored under the superstition that tomatoes caused cancers, fruit seeds appendicitic, and that bananas were bad for the digestion. We have been flooded with a mass of literature on pure foods and "back-to-nature" diets, but the statements made have lacked scientific verification.

Some time ago, Prof. Atwater, of Wesleyan university, Middletown, Conn., began a series of important nutritive investigation which at once showed the significance of the food problem. About 1896, the department of chemistry of the University of Illinois also began a series of inquiries into the problem of nutrition. The work is under the direction of Dr. Harry S. Grindley, professor of general chemistry. These investigations have developed new methods of research, and now present a very large and promising field both for the scientist and the economist.

The ultimate, fundamental, underlying object of the nutrition investigations is the study of flesh as food for man. In order to attain the above object the work comprises first, a study of the value of meat as food and second, a study of the injurious results produced by the consumption of flesh. The specific subjects studied are chemical composition, fuel value, digestibility, economic value, methods of cooking meats and influence of the consumption of meat upon the health. Of all the work so far accomplished, the results obtained in the study of the cooking of meat and the digestibility of meat are of most interest and practical value.

The nutritive value and the palatability of meats depend more upon their cooking than upon their composition. Notwithstanding this fact, until recently practically no experimental study has been made upon the cooking of meats. The recent results have demonstrated clearly that the beneficial results produced in the processes of cooking meat are due in the main to the following causes. In the first place, certain chemical changes take place in the flesh during the cooking which give rise to the formation of substances having agreeable odors and flavors. These bodies make the meat more agreeable and appetizing and, at the same time, do much good in stimulating and assisting the digestion and assimilation of the food principles occurring in the meat itself and in the other foods which are used with it.

In the second place, the process of cooking produces changes in the consistency of meats so that it is more easily and readily masticated.

In the third place the destruction of germs and parasites in the process of cooking is sometimes of considerable importance. The frequent occurrence of such germs in pork is one of the reasons why this meat should be thoroughly cooked.

Meats in cooking lose much weight. The amount, character and value of the food nutriments thus lost is an important economic question. While in a private family it may not be necessary to consider such a question, when large numbers are to be fed, it will be recognized that those meats which shrink least in cooking, other things being equal, are the most desirable. In connection with these researches 150 elaborate experiments have been made for the purpose of determining the amount, character and economic value of the losses which occur when meats are cooked by the methods in common use. The results of these experiments have shown that the greatest loss in weight which occurs in cooking meats by boiling, and pan-broiling is due to the removal of water. In the roasting of meat the chief loss is due to the removal of both water and fat. The losses of nutritive material in the pan-boiling of meats are very small as compared with the losses which take place in boiling, roasting and sauteing. The results of a large number of experiments in which meat was cooked by boiling have proven that in cooking 100 pounds of beef by this method, there is upon an average the following losses: Total loss in weight 34.35 pounds, water 30.75 pounds, protein 1.41 pounds, fat 1.21 pounds and mineral matter (ash) 0.46 pounds. The same experiments demonstrated the maximum losses to be as follows: Total loss in weight 59.20 pounds, water 45.92 pounds, protein 2.62 pounds, fat 8.50 pounds and mineral matter 0.70 pounds.

The minimum losses were as follows: Total loss in weight 10.61 pounds, water 8.67 pounds, protein 0.20 pounds, fat 0.03 pounds and mineral matter 0.15 pounds.

In a large number of experiments the average losses resulting in the roasting of 100 pounds of beef were found to be as follows: Total loss in weight 22.47 pounds, water 14.63 pounds, protein 0.15 pounds, fat 8.52 pounds and ash 0.12 pounds. It is thus evident that the nature of the losses is quite different in the roasting of meats from that occurring when they are boiled. In the latter, the greater part of the loss is due to water, but in the former the main loss is distributed between the water and fat. In other words, the loss of fat is much greater when meat is roasted than when it is boiled.

The losses of nutritive material in the pan-broiling of meats are very small as compared with the losses which take place in boiling and roasting.

There are two methods which are commonly used to determine the digestibility of foods. They are actual or natural digestion method and the artificial method. The latter consists in treating weighed quantities of the food with a very delute acid solution. In the actual or natural digestion experiments the subject of the experiment, usually a healthy, strong man, is fed upon the food or foods, the digestibility of which are to be determined. In the experiments at the University of Illinois, the diet of the subject consisted chiefly of beef, together with bread and milk.

THE RESULTS OF THE EXPERIMENTS.

The natural digestion experiments teach the fact that the nutriments of beef are almost completely digested. The average results of 60 experiments show that the proteids, the most valuable food constituents of beef are practically completely digested and that about 96 to 98 per cent. of the fat of medium lean meat are digested by healthy men, doing active work.

The results of the experiments indicate plainly that the different methods of good cooking have little or no influence upon the digestibility of the cooked meat. That is to say, natural digestion experiments point to the conclusion that fried beef, when properly cooked, is as completely digested as is boiled or roasted beef, when properly cooked. However, artificial digestion experiments indicate clearly that raw meat and meat cooked by boiling and roasting are more rapidly and easily soluble or digestible than broiled or fried meats.

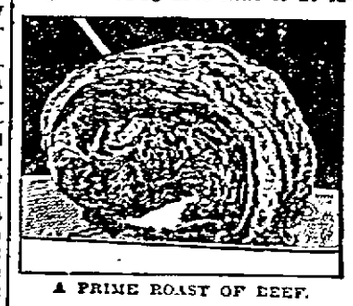

A PRIME ROAST OF BEEF.

It has also been plainly shown by these investigations that fat beef is not as easily or rapidly digested as lean beef. For example the average coefficient of digestibility of three samples of very fat beef was only 89.65 at the end of one hour, while the average coefficient of digestibility of three samples of lean meat was 95.52. This difference was also noticed at the end of the second hour, the ratio being then as 97.66 is to 89.79.

In a considerable number of the natural digestion experiments, the subjects who were strong, healthy, young men lived almost entirely upon meat. In living for three or four days at a time, every other week, upon a diet consisting almost exclusively of meat, they experienced no detrimental or injurious results. They were no more inconvenienced in making meat the chief article of their daily diet than when bread or any other food was used as the main constituent in the diet. No disorders in the proper workings of the body were observed. It does not necessarily follow from these experiments that a continuous meat diet would not finally produce effects of an injurious nature. In fact, the results of the experiments at the University of Illinois have led to the tentative conclusion that a judiciously mixed diet is most advantageous for the average individual.

Continued from Page 4.

under be allowed in full. Carried, all voting aye.

Upon motion the bill of R. J. Davison was laid over until the next regular meeting of the Council.

Moved by Alderman Pecor seconded by Alderman Divers that bill No. 7267 of the Rhinelander Light Co., be reconsidered and that such bill be allowed at $269.00 as recommended by the Comptroller. Carried, all voting aye.

A petition to Council from Frank Innes for to reimburse him one-half of the expense for going through a ledge of rock in laying the sewer on North Brown street, and was such petition referred to the Board of Public Works.

Moved and carried that the matter of printing the city and the special improvements Bonds be referred to the City Clerk and the printing committe and they be instructed to have such work done.

A bill of Dr. T. R. Welch amounting to $17.00 for service rendered in the month of Sept. 1901, and such bill duly allowed at that time at $16.00, was now again presented to Council, and was any party interested in such bill referred to Sec. 925-258, Statutes of 1893.

The following was read:

Rhinelander, Wis., Aug. 28, 1905.

To the Hon. Mayor and Common Council City of Rhinelander:

GENTLEMEN:—We present to you the following proposition:

We will agree to contract with the City of Rhinelander to build, maintain and operate a sash, door, blind and interior finishing factory in connection with our business, same to be built and put in operation within four months. Building to be of concrete, two stories high 50x165 feet. In return we ask the City of Rhinelander to give us $4000.00. We will agree to maintain and operate this plant for a term of not less than ten years and to employ not less than 75 men. If you will comply with our request, we will commence building at once. Yours truly,

ROBBINS LUMBER CO.,
By F. S. Robbins, President.

Moved, by Alderman Divers seconded by Alderman Dorsch, that the City accepts the proposition of the Robbins Lumber Co. Carried, all voting aye.

Moved and carried that the Mayor appoint a special committee, consisting of three aldermen to confer with the Rhinelander Light Co. and they be instructed for to have a contract for the street lighting drawn up.

For such committee the Mayor appointed Alderman Smith, Divers and Gilligan.

Moved by Alderman Roepke seconded by Alderman Dorsch that the Mayor appoint a special committee consisting of three Aldermen for to investigate and try and locate and have a street laid out alongside the railroad tracks in block nine in the town site of Pelican from the bridge to Briggs street. Carried.

For such committee the following Aldermen were appointed: C. H. Roepke, Henry Roepke, and John Dorsch.

Upon motion Council adjourned.

GUST. SWEDBERG, City Clerk.

September 12, 1905.

At a special meeting of the Common Council duly called by the Hon. Mayor, Matt Stapleton and held on the 12th day of September, 1905.

All members present except Alderman Gilligan.

Moved by Alderman Smith, seconded by Alderman Caulkins that the Council adopts the grades for sidewalks and curb and gutter established by the City Engineer.

Amendment to such motion made by Alderman Divers seconded by Alderman Pecor that the grades as established on the corner of Oneida avenue and Frederick street be lowered one foot. Carried, the Aldermen voting as follows: Barnes, Divers, Dorsch, Johnson, Pecor and Whalen voting and Aldermen Caulkins, Morrill, Roepke, Henry Roepke and Smith voting no.

Moved by Alderman Roepke seconded by Alderman Caulkins that the curb and sidewalks on Davenport street be put in according to grade established by the City Engineer. Carried, the Aldermen voting as follows: Caulkins, Morrill, Roepke, Henry Roepke, Smith and Whalen voting aye and Barnes, Divers, Dorsch, Johnson and Pecor voting no.

Upon motion Council adjourned until Friday evening, Sept. 15, 1905.

GUST. SWEDBERG, City Clerk.

COUNTY BOARD PROCEEDINGS.

Rhinelander, Wis., June 27, 1905, 2 p. m. Office of County clerk, Oneida county, Wis.

Board of Supervisors of Oneida county met pursuant to call signed by a majority of the supervisors. Meeting called to order by county clerk. Roll call the following members were present; Brown, Bonack, Briggs, Hamlin, Hardell, Jewell, Jenkinson Keeler, Kelley, Meyer, Moody, Markham, Powers, Porter, Reardon, Stein, Smith, Wubker and Wheeler.

Moved by Supervisor Wubker, and seconded by supervisor Markham that supervisor A. W. Brown be elected chairman of the Board by acclamation. Motion carried and Mr. Brown declared elected.

Moved by Supervisor Wubker, and seconded by supervisor Briggs, that supervisor L. H. Wheeler be elected vice-chairman by acclamation. Motion carried and Mr. Wheeler declared elected.

The chairman appointed the following standing committees:

Illegal Taxes—O. A. Jenne, G. W. Porter, F. D. Briggs, Steven Powers, Henry Wubker

Settlement with Co. Officers—G. Porter, G. C. Jewell, Wm. Hardell.

Public Printing—J. J. Reardon, Wm. Hardell, O. A. Jenne, T. L. Moody.

Com. on Poor—W. Hardell, W. R. Markham, T. L. Moody, C. Keeler, Emery Hamlin

Com. on General Claims—L. H. Wheeler, J. J. Reardon, Henry Wubker, Wm. Bonack, John Meyer.

Com. on Sheriff's and Justice accounts—Geo. C. Jewell, Ira E. Smith, D. L. Jenkinson, Peter Stein, John W. Kelley.

The following ordinance was read:

The County Board of Supervisors of the county of Oneida, do ordain as follows:

First—Township number thirty-nine, north of Range seven east and sections numbered one, two, three and four of township number thirty-nine, north of Range six east in Oneida County, are hereby detached from the Town of Minocqua and created into a new town to be known as the Town of Woodruff.

Second—It is hereby determined that the territory so created into the new town contains a population of more than one hundred and twenty-five inhabitants, more than twenty-five of whom have been actual electors of this state and residents within the said territory so created into the town of Woodruff for at least six months last past.

Third—The valuation of the territory so set off and created into the Town of Woodruff, is $14,172 and the valuation of the territory in the Town of Minocqua before the said territory is detached is $200,167, all according to the last tax-roll.

Fourth—It is hereby determined that the new Town of Woodruff is liable for eleven and six tenths per cent. of the indebtedness of the Town of Minocqua and is entitled to receive of the said town eleven and six tenths per cent. of its assets. It is further determined that the assets and liabilities of the said town of Minocqua are equal, provided that the Town of Woodruff pays the assessors and assistant's salary, who have made the assessment of the territory embraced in the new town, and it is determined that said new town shall pay such salary. The town of Woodruff shall further pay a $75.00 lumber bill to the Ross Lumber Co. And it is provided further that the territory of the new town shall not be liable for taxes levied in the town of Minocqua but is set off free from such taxes. The town of Minocqua shall pay all state indebtedness due from such town and the new town shall not be liable for any part of such indebtedness.

Fifth. The first town meeting of the town of Woodruff shall be held in the town hall in the village of Woodruff, July fifth 1905.

Sixth. This ordinance shall take effect and be in force upon its passage and publication.

Offered by
HENRY WUBKER,
Supervisor.

Moved by Supervisor Markham that the ordinance be adopted as read. Carried the Supervisors voting as follows, Brown, Bonack, Hamlin, Jewell, Jenkinson, Keeler, Kelley, Meyer, Moody, Markham, Powers, Potter, Reardon, Stein, Smith and Wubker (16) voting aye and Briggs and Wheeler (2) voting No.

On motion Board adjourned until June 28, 1905 at 9 a. m.

WM. W. CARR,
County Clerk.

Rhinelander, Wis., June 28, 1905, 9 a. m. Office of County clerk, Oneida county, Wis.

Board of Supervisors of Oneida county, met pursuant to adjournment. Meeting called to order by Chairman A. W. Brown. Roll call, the following supervisors were present: Bonack, Briggs, Hamlin, Hardell, Jewell, Jenkinson, Keeler, Kelley, Meyer, Moody, Markham, Powers, Porter, Reardon, Stein, Smith, Wheeler and Wubker.

Petition of Town of Monico, asking for aid to build a bridge in said town was read and on motion was accepted and placed on file. Chairman appointed Supervisors Bonack and Wubker a committee to act with the town board of Monico in the matter of the Monico bridge.

Petition of Oneida County Agricultural society, asking for an appropriation of $100, to be used for the construction of a fence around the grounds of said society, was read. Moved by supervisor Reardon and seconded by Supervisor Jewell that the petition be accepted and the sum of $100, be so appropriated and the chairman and clerk authorized to issue an order for said amount. Carried, all voting aye.

Communication of Jno. Barnes in relation to a settlement of the cases of Oneida Co. vs. the Towns of Hazelhurst and Woodboro, was read, and on motion was referred to the District Attorney and Geo. G. Greene for instructions.

The following resolution was read:

Whereas, the board at its March meeting disallowed in full the claims of the Herald Pub. Co., W. H. Trumbull and E. O. Brown Administrator, for the publication of the general election notice for the year, 1904, and whereas appeals have been taken in due form to the Circuit Court from such action of the Board, and

Whereas, it is undisputed that a part of each of said bills are legal charges against the county, while the balance of such bills are in dispute and if such cases go to trial, the county will have to pay a judgment in some amount and costs in each action. And

Whereas the said claimants have offered to compromise such litigation for the sum of one hundred and fifty dollars each, without costs. Resolved that the proper officers are instructed to draw orders for one hundred and fifty dollars each to E. O. Brown, administrator, W. H. Trumbull and The Herald Publishing Co. in full settlement of said accounts. Offered by:

Wm. Hardell, Supervisor.

Moved by supervisor Hardell, and seconded by supervisor Wubker, that the resolution be adopted.

Moved by Supervisor Wheeler and seconded by supervisor Jenkinson to amend by laying the resolution over and referring the same to the District Attorney. Amendment carried, resolution laid over and referred.

Moved by Supervisor Wubker and seconded by supervisor Markham that the chairman and District Attorney be instructed to enter into a contract with the sheriff allowing $1,000 per year salary and $100 per year for board of prisoners, by reason of the increased territory added to Oneida County.

Motion carried, supervisors voting as follows: Bonack, Briggs, Hamlin, Hardell, Jewell, Jenkinson, Keeler, Kelley, Meyer, Markham, Powers, Porter, Reardon, Stein Smith and Wubker, (16) voting aye, and Brown and Moody, (2) voting no.

The following resolution was read:

Resolved by the County Board of Oneida County that the matter of procuring transcripts from Vilas county be referred to the Committee on Public Property and the District Attorney with full power to represent the Board in the matter of having such work done. Offered by

Henry Wubker, Supervisor.

Moved by supervisor Wubker, and seconded by Supervisor Porter, that the resolution be adopted as read. Carried, all of the supervisors voting aye.

The following resolution was read, and on motion of supervisor Wheeler seconded by supervisor Jewell was adopted.

Resolved by the County Board of Supervisors of Oneida County, Wis., that no chairman has the power to employ or allow any physician in connection with the county poor, without first communicating with the poor commissioner and the county physician with the exception of a case of emergency where immediate attention is required. L. H. Wheeler, Supervisor.

Moved by Supervisor Wubker and seconded by supervisor Powers that the County Superintendent of Schools be allowed $200.00 per year for his expenses to be drawn with his salary monthly. Carried.

Moved by supervisor Powers and seconded by supervisor Smith, that Supervisors Wubker, Hardell and Jenkinson be appointed purchasing committee for the office of Superintendent of Schools. Carried.

On motion Board took a recess until June 28th, 1905, at 2 p. m. WM. W. CARR,
County Clerk.

Rhinelander, Wis., June 28, 1905, 2 p. m.

Board of Supervisors, of Oneida County, Wis., met pursuant to recess taken. Meeting called to order by Chairman A. Brown. Roll call, the following supervisors were present. Bonack Briggs, Hamilton Hardell, Jewell, Jenkinson, Keeler, Kelley, Meyer, Moody, Markham, Powers, Porter, Stein, Smith and Wubker.

Petition of Town of Cassian for aid in construction of two bridges was read. (see file) Moved by supervisor Kelley and second by supervisor Moody that the petition be accepted and placed on file. Carried.

Chairman appointed supervisors Wubker and Kelley, committee in the matter of the Town of Cassian bridges.

The following report of the committee on Poor and Pauper accounts was read:

1. Cole & Rogers, merchandise	$ 62.81	$ 62.81
2. Matt Stapleton, board and railroad fare	3.36	3.36
3. welsey Beach, nursing	15.00	15.00
4. F. S. Campbell, merchandise	1.91	1.91
5. w. D. Durkee, merchandise	20.00	20.00
6. J. H. Queal & Co., lumber	2.67	2.67
7. B. L. Horr, merchandise	11.25	11.25
8. w. D. Neville, operation Tom Ross	22.00	22.00
9. Dunn & wood, hardware	81.72	81.72
10. Morril & Barber, undertaking	14.00	14.00
11. F. A. Hildebrand, undertaking	30.00	30.00
12. Spafford & Cole, merchandise	6.22	6.22
13. Hans Anderson, merchandise	34.55	34.55
14. J. w. Shannon, merchandise	26.00	26.00
15. Lewis Hardware Co., hardware	25.80	25.80
16. J. H. Queal & Co. lumber	4.30	4.30
17. Markham & Davison, blacksmithing	3.10	3.10
18. Robbins Lumber Co. lumber	6.00	6.00
19. D. O. Dietzman, disbursements	26.95	26.95
20. D. Houle, Board and nursing	22.15	22.15
21. L. D. Hayford, digging well	4.56	4.56
22. T. L. Labour, mdse	77.02	77.02
23. St Mary's Hospital, care of patients	40.00	40.00
24. C. H. Roepcke, mdse	4.95	4.95
25. F. E. Kritlow, mdse	2.15	2.15
26. P. F. Stiebel, mdse	10.20	10.20
27. w. D. Neville, ser. small pox case	9.00	9.00
28. T. G. Torpy, med. services	Referred to Dist Att'y	
29. w. D. Neville, med services	Referred to Dist Att'y	
30. w. J. Pinkerton, med ser	69.25 referred to Dist. Att'y	
31. A. B. Rosenberry, med ser	25 referred to Dist. Att'y	
32. w. J. Pinkerton, med ser	111 Referred to Dist Att'y	
33. w. Irvin, Med. Ser. Mrs. Jensen	74.00	74.00
34. Dr. Hogan, Med. ser	15.00 referred to Dist. Att'y	

To the County Board of Supervisors of Oneida Co., wis:

Gentlemen:—Your Committee on Poor and Pauper accts beg leave to report that they have examined the following bills referred to them, and recommend that they be allowed, disallowed or disposed of as set forth in the schedule hereto annexed.

Dated June 28, 1905.

WM. HARDELL
EMERY HAMLIN
W. R. MARKHAM
T. L. MOODY
ED. KEELER

Moved by Supervisor wubker and seconded by Supervisor Kelley that the report be adopted as read and chairman and clerk instructed to draw orders for same as allowed in said report. Carried all of the Supervisors voting aye.

The following report of committee on General Claims was read:

1. w. H. Trumbull, Printing Tax Sale Notice	776.25	752.25
2. F. M. Mason, postage etc	10.19	10.19
3. N. T. Bakkain, clerk Hire	55.25	referred
4. N. T. Bakkain, postage	3.04	3.04
5. F. E. Parker, envelopes	10.50	10.50
6. Spafford & Cole, mdse for jail	10.80	10.80
7. F. M. Mason, reporting marriages	4.75	4.75
8. F. M. Mason, attending state convention	21.25	21.25
9. J. G. Dunn, freight	2.52	2.52
10. Geo. G. Green, Attorney fees	621.07	referred
11. wm. w. Carr, 1 day on Board of Commission	3.00	3.00
12. Park & Co., printing	21.65	21.65
13. wm. w. Carr, postage, express, etc	19.29	19.29
14. Morrill & Barber, supplies for jail	21.50	21.50
15. wm. w. Carr, making assessment rolls	212.50	212.50
16. w. H. Trumbull, court calendars etc	12.10	12.10
17. H. G. Razall Mfg. Co., tally sheets	2.70	2.70
18. R. H. Gile, Record	.79	.79
19. H. Niederken Co. Records	22.00	22.00
20. H. Niedicker Co., assessment rolls	24.50	24.50
21. H. Niedecker Co. Blanks	11.55	11.55
22. Remington Typewriter Co. typewriter	62.50	62.50
23. Oneida Co., Land and Abstract Co. dates of entries	67.65	67.65
24. Hub Clothing store, merchandise	14.75	11.35
25. Rhinelander Mutual Tel. Co., rent of 'phones	25.25	25.25
26. L. Stumpner, table and desk	22.50	22.50
27. Rhinelander Lighting Co., rent of lights	5.19	5.19
28. A. J. wilcox, labor	2.22	2.22
29. Rhinelander Lighting Co., rent of lights	1.55	1.55
30. w. F. Ball, fee	4.00	4.00

To the County Board of Supervisors of Oneida County, wisconsin

GENTLEMEN:—Your committee on general claims beg leave to report that they have examined the following bills referred to them, and recommended that they be allowed, disallowed or disposed of as set forth in the schedule hereto annexed.

Dated June 27, 1905

L. H. WHEELER,
HENRY WUBKER,
JOHN MEYER,
WM BONAK
Committee

Moved by sup. Porter and seconded by sup. Hardell that the report be adopted as read and the chairman and clerk instructed to draw orders for same as allowed in said report; carried all of the supervisors voting aye.

Moved by sup. Porter and seconded by sup. Jenkinson that general claim No. 10 be allowed and the chairman and clerk instructed to draw an order for same; carried.

Moved by sup. Hardell and seconded by sup. Moody that general claim No. 10 be allowed and chairman and clerk instructed to draw an order for same; carried.

Moved by sup. wubker and seconded by sup. Powers that the committee on Public property be authorized in addition to the work already authorized to be done on the county jail, to put in three new cells in the up stairs of the jail, if in their judgment it deemed necessary. Motion carried, all of the supervisors voting aye.

Moved by sup. wubker and seconded by sup. Jewell that the bid of S. R. Stone for the position of county physician at a salary of $200.00 per annum be accepted and the chairman and clerk instructed to enter into contract with Dr. Stone; carried all voting aye.

The following report of committee on Sheriff and Justice accounts was read

REPORT OF COMMITTEE.

To the County Board of Supervisors of Oneida County, Wis. Gentlemen:—Your committee on Sheriff and Justice Bills beg leave to report that they have examined the following bills referred to them, and recommend that they be allowed, disallowed or disposed of as set forth in the schedule hereto annexed

Dated June 28, 1905.

GEO C JEWELL, IRA E SMITH,
D L JENKINSON, PETER STEIN,
JOHN W KELLY, Committee.

No.	Claimant and Nature of Claim	Am't Claimed	Am't Allowed
			Ref. to Board
1	T R Welch, medical attendance, A Holm	$ 5 00	
2	S R Stone, medical attendance on insane	12 00	$ 12 00
3	T R Welch, examining insane persons	8 00	8 00
4	Geo H Sales, State vs. J Arndt	5 00	5 00
5	J M Hogan, examining insane persons	16 00	12 00
6	Rhinelander Steam Laundry, work for jurors	2 25	2 25
7	P B Stewart, examining insane	4 00	4 00
8	Jas Schrump, inquest on Jas Manning	1 72	1 72
9	Jas Schrump, assisting coroner on Manning	2 00	2 00
10	H J Sparks, " " " "	2 00	2 00
11	F M Mason, inquest on Jas Manning	8 40	8 40
12	H L Garner, examining insane	4 00	4 00
13	H L Garner, examining insane	4 00	4 00
14	W T Stevens, Insane Nor. Hospital, F Schwent	40 20	40 20
15	" Chas Colland to Waupun	60 44	60 44
16	" Aug Helm Hazelhurst to Rabbler	4 35	4 35
17	" Long distance telephone	2 15	2 15
18	" L Hay to Waukesha	43 45	43 45
19	" M Jaska to Waupun	29 07	29 07
20	" F Schmidt to Waupun	31 00	31 00
21	" A Revoy to Waupun	58 80	58 80
22	" Postage	2 00	2 00
23	" J O'Brien to Northern Hospital	45 42	45 42
24	" J Arndt to Waupun	73 60	73 60
25	" N Anderson to Mendota	60 40	60 40
26	" Subpoenaing witness, H Revoy	9 77	9 77
27	" " " "	32 37	32 37
28	" " " M Jaska	17 31	17 31
29	" " " M Jaska	20 60	20 60
30	" " " H Revoy	36 22	36 22
31	" " " M Jaska	7 40	7 40
32	" Telegram	57	57
33	" Subpoenaing witness, H Revoy	27 79	27 79
34	" " " J Houston	7 85	7 85
35	" Boarding prisoners March 28 to June 27,	256 28	256 28
36	F Mason, inquest on C Craw and S Miller	11 40	11 40
37	H Voss, wit., " " " " "	2 44	2 44
38	L Miller " " " " " "	2 44	2 44
39	E Craw " " " " " "	2 44	2 44
40	L O Miller " " " " " "	2 44	2 44
41	L J Billings, 4 commitments to Nor. Hospital	20 00	20 00
42	T B McIndoe, examining insane	20 00	20 00
43	Thos McCormick, inquest Gus Hagen, juror	1 10	1 10
44	E H Flaherty, " " "	1 10	1 10
45	Stanley Rayner, " " "	1 10	1 10
46	N P Maynard, " " "	1 10	1 10
47	Jesse Sipes, " " "	1 10	1 10
48	N A Anderson " " "	1 10	1 10
49	Geo LaBar " " witness	1 10	1 10
50	E Buchera " " witness	1 10	1 10
51	Theo Bruett " " constable	1 10	1 10
52	J Holliday " " justice	2 10	2 10
53	F Federer, justice court, J Olkowski	17 71	ref. to Dist. Atty.
54	F Federer, justice court, C Carrier	3 47	ref. to Dist. Atty.
55	F Federer, justice court, A Revoyer	8 80	ref. to Dist. Atty.
56	F Federer, justice court, A Revoyer	13 17	ref. to Dist. Atty.
57	Lizzie Duval, wit. fees, state vs Geo Grider	1 08	1 08
58	T Duval, wit. fees, State vs Geo Grider	1 08	1 08
59	Edda Strupp, wit. fees, State vs Geo Grider	1 08	1 08
60	Mason Miller, State vs F Duffy, witness fees	1 23	1 23
61	Kate Miller, State vs F Duffy, witness fees	1 23	1 23
62	E Swanson, State vs Roy Skinner, witness fees	83	83
63	C Anderson, State vs Roy Skinner, witness fees	83	83
64	Ila Swanson, State vs Roy Skinner, witness fees	83	83
65	Kate Schafer, State vs Roy Skinner, witness fees	99	99
66	Lula Hughson, State vs Roy Skinner, witness fees	83	83
67	Wm Whitney, State vs Roy Skinner, witness fees	91	91
68	O Peterson, State vs Roy Skinner, witness fees	83	83
69	H Anderson, State vs Roy Skinner, witness fees	83	83
70	Kittie Fuerstein, State vs Aug Kinard	4 76	4 76
71	Peter Fuerstein, State vs Aug Kinard	7 20	7 20
72	John Hagen, State vs Aug Kinard	7 20	7 20
73	M Kerns, State vs Aug Kinard	83	83
74	E C Sturdevant, clerk of court fees	80 23	80 23
75	E C Sturdevant, clerk of court fees	81 93	81 93

Moved by sup. Porter and seconded by sup. Briggs that the report be adopted as read and the chairman and clerk instructed to draw orders for same as allowed in said report; carried all voting aye.

Claim No. 1 of Sherriff and Justice accounts was on motion laid over for further investigation.

On motion Board adjourned
Wm. Carr, County Clerk.

LEGALS.

NOTICE FOR PUBLICATION.
DEPARTMENT OF THE INTERIOR,
LAND OFFICE AT WAUSAU, WIS.
August 21st., 1905.

Notice is hereby given that the following-named settler has filed notice of his intention to make final proof in support of his claim, and that said proof will be made before Clerk Circuit Court, at Rhinelander, Wisconsin, on November 6th, 1905, viz: Wincle Wessel, of Keelers, Wis., who made H. E. No. 9759, for the SW¼ NE¼ & SE¼ NW¼ Sec. 7 Tp. 35 N., R. 10 East.

He names the following witnesses to prove his continuous residence upon and cultivation of said land, viz: Fred Grapengeiser of Rhinelander, Wis., Ed. Keeler, Carl Haase, Julius Schoeneck of Keelers, Wis.

a31-o27. JOHN W. MILLER, Register.

STATE OF WISCONSIN, COUNTY COURT FOR ONEIDA COUNTY:

In the matter of the estate of John Beandin deceased. In Probate.

Notice is hereby given that the claims and demands of all persons against John Beandin deceased, late of the city of Rhinelander in said county will be received, examined and adjusted by the County Court of Oneida county, at the regular terms of said Court, to be held at the Court House in the City of Rhinelander in and for said county on the 1st Tuesday of January and on the 1st Tuesday of February A. D. 1906.

Also, that six months from and after the 24th day of August A. D. 1905, is the time limited for creditors of said John Beandin deceased to present their claims to said Court for examination and allowance.

Dated August 24, 1905.

By order of the Court,
LEVI J. BILLINGS, County Judge.

NOTICE FOR PUBLICATION.
DEPARTMENT OF THE INTERIOR,
LAND OFFICE AT WAUSAU, WIS.,
September 5, 1905.

Notice is hereby given that the following-named settler has filed notice of his intention to make final proof in support of his claim, and that said proof will be made before Clerk Circuit Court at Rhinelander, Wisconsin, on Nov. 6th, 1905, viz: Gabriel Stephenson of Hazelhurst, Wis., who made homestead entry No. 11123 for the E½ SE¼ Sec. 11 and S½ SW¼ Sec. 12 Tp. 38 N., R. 5, East.

He names the following witnesses to prove his continuous residence upon and cultivation of said land, viz: Chris. Mickaelson of Hazelhurst, Chas. Schwartz of Hazelhurst, Jack Schwartz of Hazelhurst, A. G. Stephenson of Merrill, Wisconsin.

s14-o2. JOHN W. MILLER, Register.

THREE JURORS CURED

Of Cholera Morbus with One Small Bottle of Chamberlain's Colic Cholera and Diarrhoea Remedy.

Mr. G. W. Fowler of Hightower, Ala., relates an experience he had while serving on a petit jury in a murder case at Edwardsville, county seat of Cleborne county, Alabama. He says: "While there I ate some fresh meat and some souse meat and it gave cholera morbus in a very severe form. I was never more sick in my life and sent to the drug store for a certain cholera mixture, but the druggist sent me a bottle of Chamberlain's Colic, Cholera and Diarrhoea Remedy instead, saying that he had what I sent for, but that this medicine was so much better he would rather send it to me in the fix I was in. I took one dose of it and was better in five minutes. The second dose cured me entirely. Two fellow jurors were afflicted in the same manner and one small bottle cured the three of us." For sale by

Anderle & Hinman.

FURNITURE AND ..UNDERTAKING..

State License for Embalming.

Foreign and American Granite and Marble

...MONUMENTS...

F. A. HILDEBRAND
118 Brown St. Phone 65.

Shirt Waist Suits

Are a vexation of spirit when done at home. We do them so that you can take pride in wearing them.

They look natty and you feel fashionably dressed.

You can't afford to take chances. Let us launder them and you are safe.

Rhinelander Steam Laundry

FRANK W. NORRIS, PROPRIETOR.

Phone 93 Opposite Armory

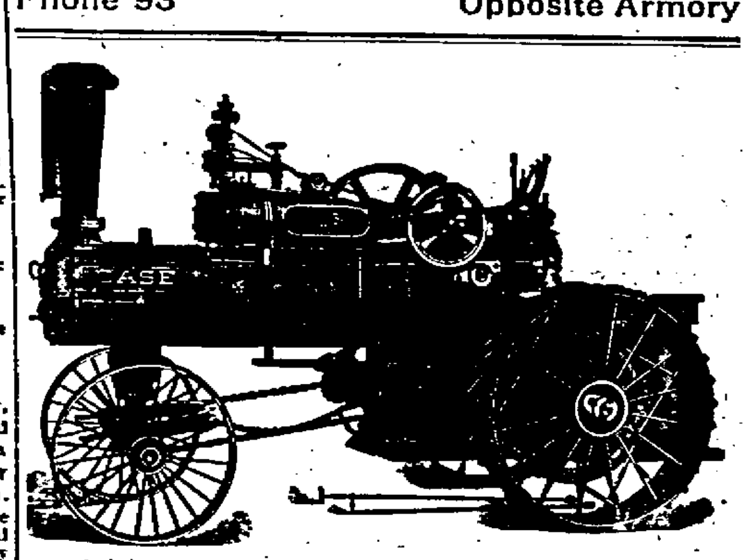

Rhinelander Iron Company, Agents.

WISCONSIN
BLUE GRASS LAND CO.

OWN AND OFFER FOR SALE

FARMING, GRAZING AND TIMBER LANDS

Choice Lake Fronts on the finest lakes in Oneida and Vilas County. Prices Low. Terms Easy. Maps and Literature will be sent on application.

EAGLE RIVER: Capt. Dan Graham, Manager.
RHINELANDER: Olof Rosen, Manager

NBC NBC NBC NBC NBC

Finger Mark or Trade Mark—

Which?

Common crackers and wafers—fingered from the time they leave the bakery until you get them in a paper bag or the Biscuit, Crackers and Wafers baked by the NATIONAL BISCUIT COMPANY and packed in a package with all their oven flavor, delicious freshness and high quality? *Which will YOU have?* If you want to answer this question once and for all, try a package of either of the three delights mentioned below:

Social Tea Biscuit
Just the thing to offer with an afternoon cup of tea—or chocolate—or coffee. In fact, they're good to eat most any time just for the pleasure of it. Sweet and slightly flavored with vanilla.

Butter Thin Biscuit
A crisp, light, dessert biscuit, rich and satisfying, served as something out of the ordinary. If you really want a biscuit that's particularly nice, try a package.

Graham Crackers
So different from the ordinary Graham Crackers—different in baking—different in flavor—different in packing. More palatable—more satisfying—more nutritious. Made of the purest Graham flour and baked in a manner that only the National Biscuit Company knows.

Ever after you will be guided by the In-er-seal Trade Mark in red and white, on each end of a package, whenever and wherever you buy *Biscuit, Crackers and Wafers.*

NATIONAL BISCUIT COMPANY